User's manual
FLIR A40/A50/A70 series

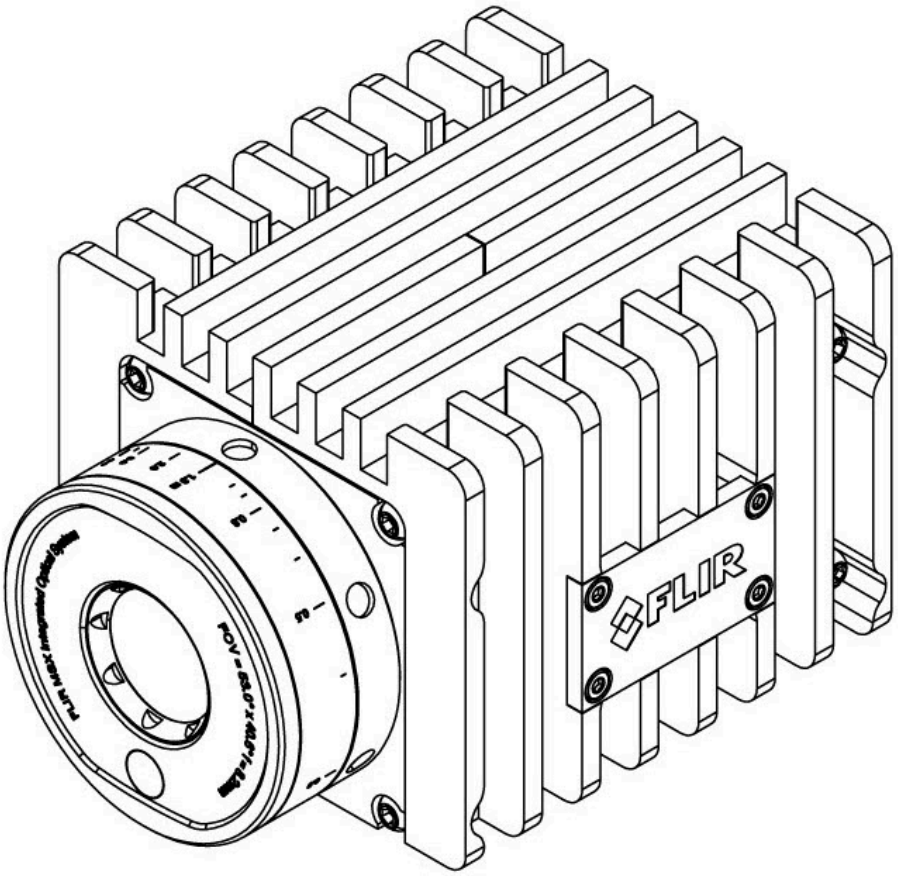

Important note
Before operating the device, you must read, understand, and follow all instructions, warnings, cautions, and legal disclaimers.

Důležitá poznámka
Před použitím zařízení si přečtěte veškeré pokyny, upozornění, varování a vyvázání se ze záruky, ujistěte se, že jim rozumíte, a řiďte se jimi.

Vigtig meddelelse
Før du betjener enheden, skal du du læse, forstå og følge alle anvisninger, advarsler, sikkerhedsforanstaltninger og ansvarsfraskrivelser.

Wichtiger Hinweis
Bevor Sie das Gerät in Betrieb nehmen, lesen, verstehen und befolgen Sie unbedingt alle Anweisungen, Warnungen, Vorsichtshinweise und Haftungsausschlüsse

Σημαντική σημείωση
Πριν από τη λειτουργία της συσκευής, πρέπει να διαβάσετε, να κατανοήσετε και να ακολουθήσετε όλες τις οδηγίες, προειδοποιήσεις, προφυλάξεις και νομικές αποποιήσεις.

Nota importante
Antes de usar el dispositivo, debe leer, comprender y seguir toda la información sobre instrucciones, advertencias, precauciones y renuncias de responsabilidad.

Tärkeä huomautus
Ennen laitteen käyttämistä on luettava ja ymmärrettävä kaikki ohjeet, vakavat varoitukset, varoitukset ja lakitiedotteet sekä noudatettava niitä.

Remarque importante
Avant d'utiliser l'appareil, vous devez lire, comprendre et suivre l'ensemble des instructions, avertissements, mises en garde et clauses légales de non-responsabilité.

Fontos megjegyzés
Az eszköz használata előtt figyelmesen olvassa el és tartsa be az összes utasítást, figyelmeztetést, óvintézkedést és jogi nyilatkozatot.

Nota importante
Prima di utilizzare il dispositivo, è importante leggere, capire e seguire tutte le istruzioni, avvertenze, precauzioni ed esclusioni di responsabilità legali.

重要な注意
デバイスをご使用になる前に、あらゆる指示、警告、注意事項、および免責条項をお読み頂き、その内容を理解して従ってください。

중요한 참고 사항
장치를 작동하기 전에 반드시 다음의 사용 설명서와 경고, 주의사항, 법적 책임제한을 읽고 이해하며 따라야 합니다.

Viktig
Før du bruker enheten, må du lese, forstå og følge instruksjoner, advarsler og informasjon om ansvarsfraskrivelse.

Belangrijke opmerking
Zorg ervoor dat u, voordat u het apparaat gaat gebruiken, alle instructies, waarschuwingen en juridische informatie hebt doorgelezen en begrepen, en dat u deze opvolgt en in acht neemt.

Ważna uwaga
Przed rozpoczęciem korzystania z urządzenia należy koniecznie zapoznać się z wszystkimi instrukcjami, ostrzeżeniami, przestrogami i uwagami prawnymi. Należy zawsze postępować zgodnie z zaleceniami tam zawartymi.

Nota importante
Antes de utilizar o dispositivo, deverá proceder à leitura e compreensão de todos os avisos, precauções, instruções e isenções de responsabilidade legal e assegurar-se do seu cumprimento.

Важное примечание
До того, как пользоваться устройством, вам необходимо прочитать и понять все предупреждения, предостережения и юридические ограничения ответственности и следовать им.

Viktig information
Innan du använder enheten måste du läsa, förstå och följa alla anvisningar, varningar, försiktighetsåtgärder och ansvarsfriskrivningar.

Önemli not
Cihazı çalıştırmadan önce tüm talimatları, uyarıları, ikazları ve yasal açıklamaları okumalı, anlamalı ve bunlara uymalısınız.

重要注意事项
在操作设备之前，您必须阅读、理解并遵循所有说明、警告、注意事项和法律免责声明。

重要注意事項
操作裝置之前，您務必閱讀、了解並遵循所有說明、警告、注意事項與法律免責聲明。

Table of contents

1 Disclaimers 1
1.1 Legal disclaimer 1
1.2 Export controls 1
1.3 Patents 1
1.4 Quality assurance 1
1.5 Third-party licenses 1
1.6 Usage statistics 1
1.7 Copyright 1
2 Safety information 2
3 Notice to user 4
3.1 Register your camera 4
3.2 Calibration 4
3.3 Accuracy 4
3.4 Disposal of electronic waste 4
3.5 Training 4
3.6 Documentation updates 5
3.7 Important note about this manual 5
3.8 Note about authoritative versions 5
4 Customer help 6
4.1 General 6
4.2 Submitting a question 6
4.3 Downloads 6
5 Introduction 7
5.1 Example system overviews 7
5.1.1 Early fire detection 8
5.1.2 Quality assurance 9
5.1.3 Condition monitoring 10
5.1.4 Research & development 11
6 Camera parts 12
7 Camera installation 13
8 Mechanical installation 14
9 RTSP Streams 15
10 Camera web interface 16
10.1 Supported browsers 16
10.2 Login 16
10.3 Navigation 16
10.4 *Camera* tab 17
10.4.1 Working with measurement tools 17
10.4.2 Working with alarms 20
10.4.3 Changing object parameters 23
10.4.4 Working with image modes 24
10.4.5 Colorizing the image 25
10.4.6 Auto-adjust region 27
10.4.7 Calibrating the camera 27
10.4.8 MSX alignment 28
10.4.9 Changing the temperature range 28
10.4.10 Adjusting the temperature scale 28
10.4.11 Flipping the image 28
10.4.12 Full screen view 29
10.4.13 Saving a snapshot 29
10.4.14 Pausing the live image stream 29
10.4.15 Hiding the overlay graphics 29
10.4.16 Filter levels 29
10.4.17 Camera presets 29

10.5 Administration tab 30
10.5.1 Firewall 30
10.5.2 SSL certificates 30
10.5.3 Services 30
10.5.4 Web protocols 31
10.5.5 User management 31
10.5.6 Regional settings 31
10.5.7 Network settings 31
10.5.8 System and firmware 32
10.5.9 SNMP settings 33
10.5.10 Multicast settings 33
10.6 Settings tab 33
10.6.1 General settings 33
10.6.2 Alarm recipients 33
10.6.3 Scheduler 34
10.6.4 MQTT 34
10.6.5 Modbus 35
10.7 *Library* tab 36
10.7.1 Managing images 36
10.7.2 Managing videos 36
10.7.3 Managing logs 36
11 Pin configurations 37
11.1 Ethernet connector and cable 37
11.2 Power/Digital I/O connector and cable 39
11.3 RS232/RS485 connector 40
12 A-series connection board 41
12.1 Connection examples 43
13 Software supported byFLIR A40/A50/A70 series cameras 49
14 Mechanical drawings 50
15 EU Declaration of conformity 52
16 Indicator LEDs and factory reset button 54
16.1 Power/error indicator LED and factory reset button 54
16.2 Power/error indicator LED and power modes 54
16.3 Wired Ethernet connection 54
17 Cleaning the camera 56
17.1 Camera housing, cables, and other items 56
17.2 Infrared lens 56
18 About calibration 57
18.1 Introduction 57
18.2 Definition—what is calibration? 57
18.3 Camera calibration at FLIR Systems 57
18.4 The differences between a calibration performed by a user and that performed directly at FLIR Systems 58
18.5 Calibration, verification and adjustment 58
18.6 Non-uniformity correction 59
18.7 Thermal image adjustment (thermal tuning) 59
19 About FLIR Systems 60
19.1 More than just an infrared camera 61
19.2 Sharing our knowledge 61
19.3 Supporting our customers 62

1 Disclaimers

1.1 Legal disclaimer

For warranty terms, refer to https://www.flir.com/warranty.

1.2 Export controls

Products described herein may be subject to export regulations.

This document does not contain export-controlled information.

1.3 Patents

This product is protected by patents, design patents, patents pending, or design patents pending. Refer to https://www.flir.com/patentnotices.

1.4 Quality assurance

The Quality Management System under which these products are developed and manufactured has been certified in accordance with the ISO 9001 standard.

We are committed to a policy of continuous development; therefore we reserve the right to make changes and improvements on any of the products without prior notice.

1.5 Third-party licenses

Information about third-party licenses is available in the user interface of the product.

1.6 Usage statistics

Anonymous usage statistics may be collected to help improve the quality of our software and services.

1.7 Copyright

© Teledyne Flir LLC. All rights reserved.

This documentation, in whole or in part, may not be copied, reproduced, distributed, or translated into any form or medium without prior written permission from Teledyne Flir LLC.

All trademarks, trade names, logos, and product names mentioned in this documentation are the property of their respective owners and are used solely for identification purposes.

2 Safety information

WARNING

Applicability: Class B digital devices.

This equipment has been tested and found to comply with the limits for a Class B digital device, pursuant to Part 15 of the FCC Rules. These limits are designed to provide reasonable protection against harmful interference in a residential installation. This equipment generates, uses and can radiate radio frequency energy and, if not installed and used in accordance with the instructions, may cause harmful interference to radio communications. However, there is no guarantee that interference will not occur in a particular installation. If this equipment does cause harmful interference to radio or television reception, which can be determined by turning the equipment off and on, the user is encouraged to try to correct the interference by one or more of the following measures:

- Reorient or relocate the receiving antenna.
- Increase the separation between the equipment and receiver.
- Connect the equipment into an outlet on a circuit different from that to which the receiver is connected.
- Consult the dealer or an experienced radio/TV technician for help.

WARNING

Applicability: Digital devices subject to 15.19/RSS-GEN.

NOTICE: This device complies with Part 15 of the FCC Rules and with Industry Canada licence-exempt RSS standard(s). Operation is subject to the following two conditions:

1. this device may not cause harmful interference, and
2. this device must accept any interference received, including interference that may cause undesired operation.

WARNING

Applicability: Digital devices subject to 15.21.

NOTICE: Changes or modifications made to this equipment not expressly approved by Flir may void the FCC authorization to operate this equipment.

WARNING

Applicability: Digital devices subject to 2.1091/2.1093/KDB 447498/RSS-102.

Radiofrequency radiation exposure Information: The radiated output power of the device is far below the FCC radio frequency exposure limits. Nevertheless, the device should be used in such a manner that the potential for human contact during normal operation is minimized.

CAUTION

Do not point the infrared camera (with or without the lens cover) at strong energy sources, for example, devices that cause laser radiation, or the sun. This can have an unwanted effect on the accuracy of the camera. It can also cause damage to the detector in the camera.

CAUTION

Do not use the camera in ambient temperatures higher than +40°C (+122°F), unless other information is specified in the user documentation or technical data. High temperatures can cause damage to the camera.

CAUTION

The surface of the camera becomes hot. Use protective equipment when handling the camera in ambient temperatures higher than +40°C (+122°F).

CAUTION

Do not apply solvents or equivalent liquids to the camera, the cables, or other items. For cleaning, refer to 17 *Cleaning the camera*.

CAUTION

Do not use too much force when you clean the infrared lens. Damage to the infrared lens or to the anti-reflective coating of the lens can occur. For cleaning, refer to 17 *Cleaning the camera*.

CAUTION

Applicability: Cameras where you can remove the lens and expose the infrared detector.

Do not use compressed air of lower quality than “Process air” when you remove dust from the detector. Air of lower quality than “Process air” can contain high levels of contaminants. Damage to the detector can occur.

CAUTION

Applicability: Cameras with an automatic shutter that can be disabled.

Do not disable the automatic shutter in the camera for a long time period (a maximum of 30 minutes is typical). This can have an unwanted effect on the accuracy of the camera.

Note The encapsulation rating is only applicable when all the openings on the camera are sealed with their correct covers, hatches, or caps. This includes the compartments for data storage, batteries, and connectors.

3 Notice to user

3.1 Register your camera

Register your camera to receive an extended warranty and other related benefits.

To register the camera, go to www.flir.com/register.

To access the registration form, you must log in to your FLIR account or sign up for a new account.

You will also need the serial number of your camera, which is available on the calibration certificate. You can also find the serial number by doing one of the following:

- Power off the camera. Carefully remove the lens without touching the detector window. A label with the serial number is available on the camera body under the lens.
- Log in to the camera web interface. Navigate to *Administration* > *System and firmware*. The serial number is available in the right pane.

3.2 Calibration

FLIR Systems recommends that you verify your calibration yearly. You can verify the calibration yourself or with the help of a FLIR Systems Partner. If preferred, FLIR Systems offers a calibration, adjustment, and general maintenance service.

3.3 Accuracy

For very accurate results, we recommend that you wait 5 minutes after you have started the camera before measuring a temperature.

3.4 Disposal of electronic waste

Electrical and electronic equipment (EEE) contains materials, components and substances that may be hazardous and present a risk to human health and the environment when waste electrical and electronic equipment (WEEE) is not handled correctly.

Equipment marked with the below crossed-out wheeled bin is electrical and electronic equipment. The crossed-out wheeled bin symbol indicates that waste electrical and electronic equipment should not be discarded together with unseparated household waste, but must be collected separately.

For this purpose all local authorities have established collection schemes under which residents can dispose waste electrical and electronic equipment at a recycling centre or other collection points, or WEEE will be collected directly from households. More detailed information is available from the technical administration of the relevant local authority.



3.5 Training

For training resources and courses, go to https://www.flir.com/support-center/training.

3.6 Documentation updates

Our manuals are updated several times per year, and we also issue product-critical notifications of changes on a regular basis.

To access the latest manuals, translations of manuals, and notifications, go to the Download tab at:

http://support.flir.com

In the download area you will also find the latest releases of manuals for our other products, as well as manuals for our historical and obsolete products.

3.7 Important note about this manual

FLIR Systems issues generic manuals that cover several cameras within a model line.

This means that this manual may contain descriptions and explanations that do not apply to your particular camera model.

3.8 Note about authoritative versions

The authoritative version of this publication is English. In the event of divergences due to translation errors, the English text has precedence. Any late changes are first implemented in English.

4 Customer help

4.1 General

Do not hesitate to contact our Customer Support Center if you experience problems or have any questions.

For customer help, go to http://support.flir.com.

4.2 Submitting a question

To submit a question to the customer help team, you must be a registered user. It only takes a few minutes to register online. If you only want to search the knowledgebase for existing questions and answers, you do not need to be a registered user.

When you want to submit a question, make sure that you have the following information to hand:

- The camera model.
- The camera serial number.
- The communication protocol, or method, between the camera and your device (e.g., SD card reader, HDMI, Ethernet, USB, or FireWire).
- Device type (PC/Mac/iPhone/iPad/Android device, etc.).
- Version of any programs from FLIR Systems.
- Full name, publication number, and revision number of the manual.

4.3 Downloads

On the customer help site you can also download the following, when applicable for the product:

- Firmware updates for your infrared camera.
- Program updates for your PC/Mac software.
- Freeware and evaluation versions of PC/Mac software.
- User documentation for current, obsolete, and historical products.
- Mechanical drawings (in *.dxf and *.pdf format).
- CAD data models (in *.stp format).
- Application examples.
- Technical datasheets.

5 Introduction

The Smart Sensor and Image Streaming cameras of the FLIR A40/A50/A70 series offer unmatched power and flexibility to tailor effective thermal monitoring that improves quality, productivity, maintenance, and safety.

- The Smart Sensor cameras analyze the images and then deliver a result to the user. Use Modbus TCP, Ethernet /IP, or ONVIF to integrate the cameras into industrial systems (HMI/SCADA, VMS, NVR), or use the REST API to transfer data from the camera to a web interface or to an application on the internet.
- The Image Streaming cameras deliver images with all related information to a computer where the user can analyze the images and then decide what to do next. Use the GigE Vision and GeniCam compatibility to integrate the cameras into your own system.

Typical applications where the Smart Sensor and Image Streaming cameras of the FLIR A40/A50/A70 series can be used are:

- Early fire detection
- Quality assurance
- Condition monitoring

For system installation examples, see 5.1 *Example system overviews*, page 7.

5.1 Example system overviews

Specific applications have not been evaluated by UL Solutions (UL 2684 Ed. 1 Para. 67.4) but may be acceptable, provided they are used within the conditions of the product's listing.

5.1.1 Early fire detection

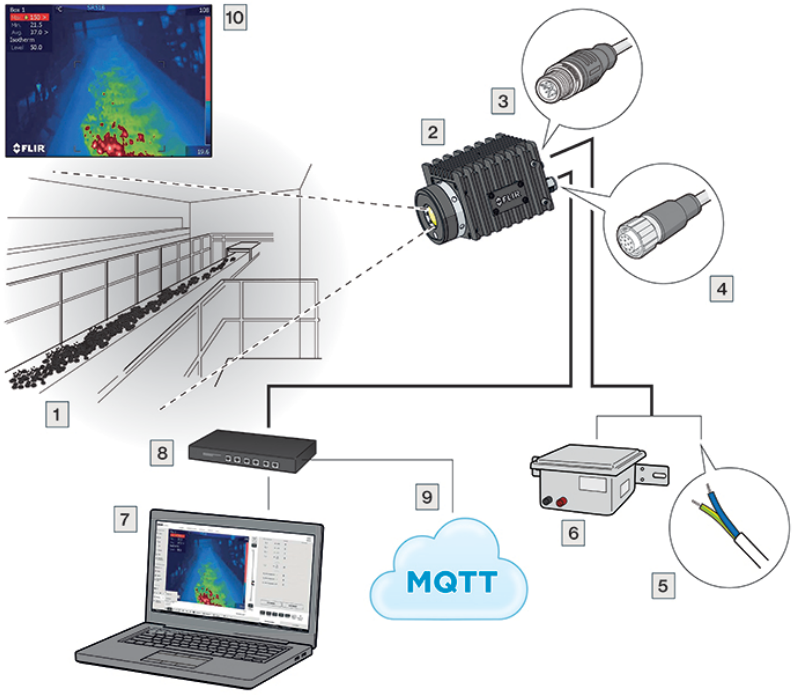

Figure 5.1 Hot spot detection, self-combustible material on conveyor belt

1. Coal mine conveyor belt.
2. FLIR A40/A50/A70 Smart Sensor camera.
3. Ethernet connector, X-coded.
4. Power I/O connector, A-coded.
5. Digital output to a programmable logic controller (PLC).
6. Separate DIN rail power supply for galvanic isolation (20–50 V DC).
7. Laptop used for set up of the camera using the web interface.
8. Ethernet switch.
9. MQTT output connected to a third-party cloud service.
10. Example thermal image.

5.1.2 Quality assurance

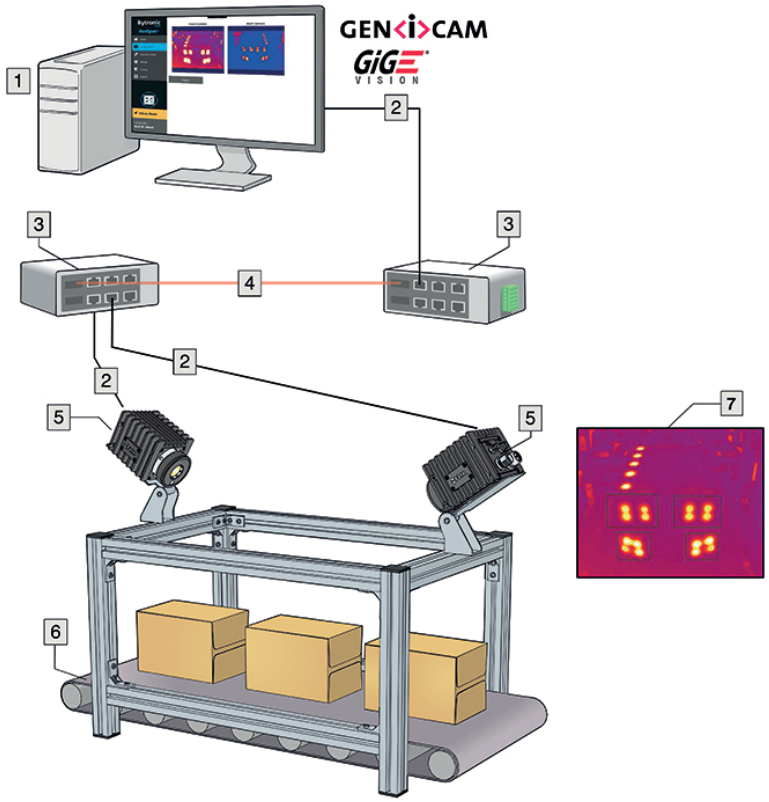

Figure 5.2 Checking hot glue on cardboard boxes

1. Computer running custom-made software.
2. CAT-6 Ethernet cables.
3. Industrial Power over Ethernet (PoE) switches with fiber-optic posts.
4. Fiber-optic cable.
5. FLIR A40/A50/A70 Image Streaming cameras.
6. Industrial process to be monitored, e.g. items on a conveyor belt.
7. Example of thermal image.

5.1.3 Condition monitoring

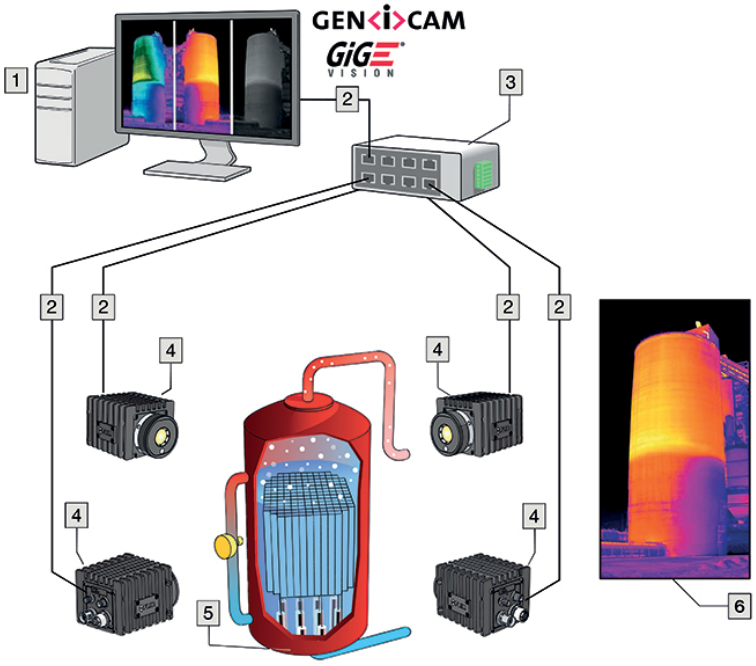

Figure 5.3 24/7 monitoring of critical assets

1. Computer running custom-made software.
2. CAT 6 Ethernet cable.
3. Industrial power over Ethernet (PoE) switch.
4. FLIR A40/A50/A70 Image Streaming cameras.
5. Industrial process to be monitored, e.g., a gasifier.
6. Example thermal image.

5.1.4 Research & development

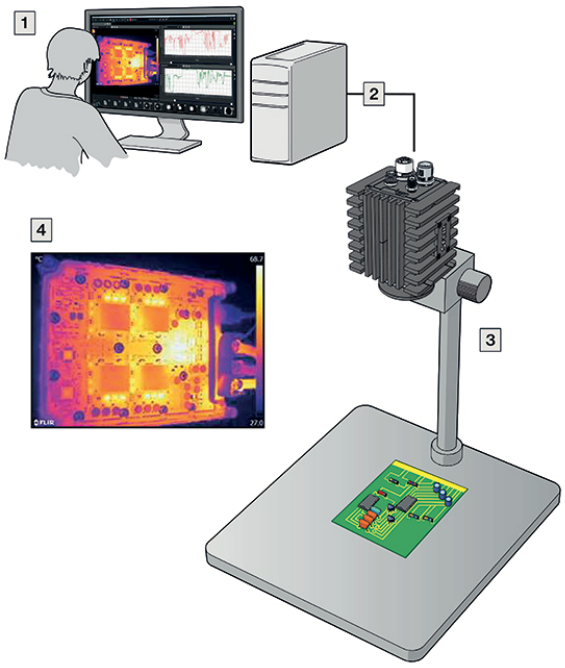

Figure 5.4 Checking heat dissipation on PCB during development

1. Computer running FLIR science software, e.g., FLIR Research Studio.
2. CAT 6 Ethernet cable.
3. Laboratory setup with a FLIR A40/A50/A70 Advanced Image Streaming camera.
4. Example thermal image.

6 Camera parts

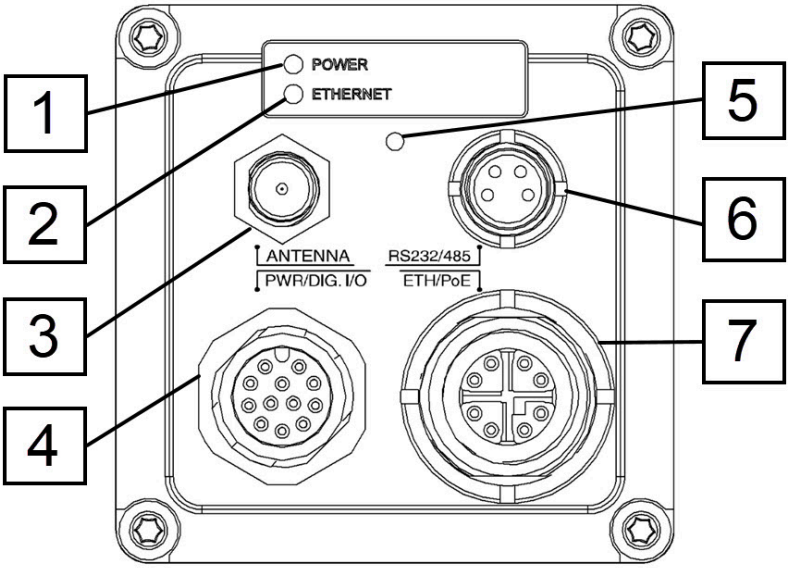

Figure 6.1 View from the rear

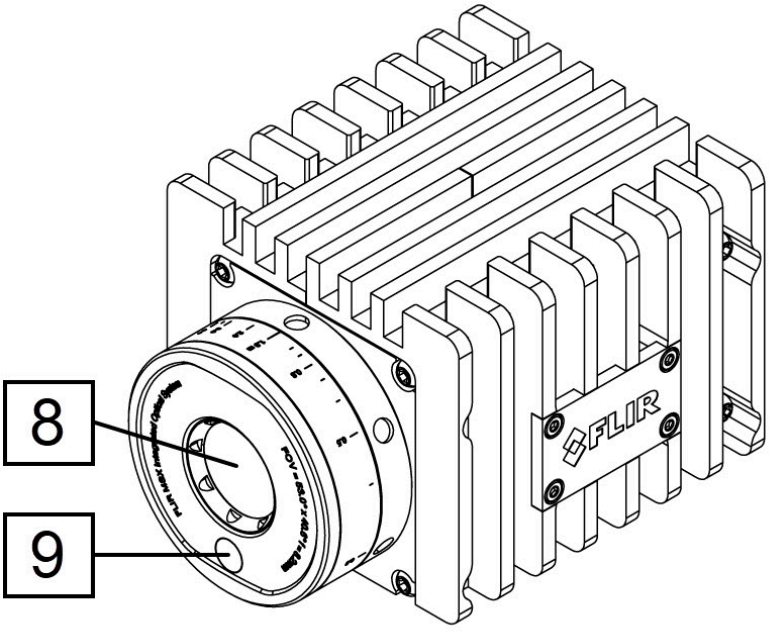

Figure 6.2 View from the front

1. Power/error indicator LED (green/red).
   For details, see section 16 *Indicator LEDs and factory reset button*, page 54.
2. Ethernet communication indicator LED (green).
3. Antenna.
4. Power-I/O connector, A-coded.
5. Factory reset button.
6. RS232/485 connector, A-coded.
7. Ethernet/PoE connector, X-coded.
8. Infrared sensor.
9. Visual camera.

7 Camera installation

Prior to installing the camera, the recommendation is to set it up on an existing network with a DHCP server, and then use the FLIR IP Config software to detect the camera on that network. The FLIR IP Config scans for cameras automatically and you can identify your camera by the MAC address printed on a label on the back of the camera. The camera is then configured from a web browser.

Note Use the latest version of FLIR IP Config.

You can power the camera by using either the Power-I/O connector (20–50 V DC) or the Ethernet/Power over Ethernet (PoE) connector (36–56 V DC) of the camera. See Figure 6.1 *View from the rear*, page 12 and 11 *Pin configurations*, page 37.

To install the camera, follow this procedure:

1. On the computer to be used for managing the camera, download FLIR IP Config from http://support.flir.com, and then install it.
2. Connect the camera to power and the network. Do one of the following:
   a. Connect the power cable between the camera and a power source (for pin configurations, refer to the user manual of the FLIR A40/A50/A70 series). Connect the network cable to the camera, and then either directly to the computer or to an Ethernet switch on the same network as the computer.
   b. Connect the PoE cable to the camera, and then to a PoE switch on the same network as the computer.
3. The camera is set to use DHCP. On the computer, use FLIR IP Config to identify the camera on the network, and change the IP settings if necessary.
4. On the computer, do one of the following:
   a. Double-click on the camera in FLIR IP Config.
   b. Type the IP address of your camera into the address bar of a web browser.

   This displays the login view.
5. Log in using the username and password available on the camera calibration certificate. This displays the web interface of the camera.
6. Use the web interface to configure the camera. For Smart Sensor cameras, use the web interface to also add measurements and set alarms. For Image Streaming cameras, use a GigE Vision SDK to control the camera and receive a radiometric image stream.

8 Mechanical installation

The camera unit has been designed to allow it to be mounted in any position. It has mounting interfaces on all sides, but not on front or back. For details, see 14 *Mechanical drawings*, page 50.

⚠ **WARNING**
Do not use screws that are too long. Damage to the camera will occur if you use screws that are too long.

The camera generates a considerable amount of heat during operation. This is normal. In order to transfer this heat, it is recommended that the camera is mounted on a bracket or heat sink made of a material with a high capacity to transfer heat, e.g., aluminum. The use of a cooling bracket or a heat sink is also strongly recommended in order to minimize the temperature drift of the infrared detector in the camera.

The temperature of the camera can be monitored by looking at the internal temperature sensors. It is recommended to not let the internal temperature exceed 70°C (158°F) for a longer period of time. The temperature sensors are available in the camera web interface or accessible by Software Development Kits (SDK).

For further information regarding mounting recommendations, contact FLIR Systems.

9 RTSP Streams

It is possible to establish streaming sessions with the Smart Sensor, the Advanced Smart Sensor, and the Advanced Image Streaming cameras of the FLIR A40/A50/A70 series.

The following URLs can be used:

- rtsp://<IP>/avc/
- rtsp://<IP>/mpeg4/
- rtsp://<IP>/mjpg/
- rtsp://<IP>/avc/ch1
- rtsp://<IP>/mpeg4/ch1
- rtsp://<IP>/mjpg/ch1

The section after IP address refers to the encoding:

- /avc = H264 encoding
- /mpeg4 = MPEG4 encoding
- /mjpg = Motion JPEG encoding

The section after the encoding refers to the source, which can be either / or /ch1:

- **/** will start a streaming session giving you the identical video as seen in the web interface. This can be IR, visual, MSX, or FSX, and the feed is 640 x 480 pixels.
  Add the &overlay=off argument in the URL to receive a feed without overlay.
- **/ch1** will start a streaming session giving you the uncropped visual image at 1280 x 960 pixels.

A radiometric 16-bit stream is also available for software supporting it.

10 Camera web interface

10.1 Supported browsers

The camera web interface supports the following browsers and versions:

- Google Chrome 77 and higher,
- Microsoft Edge 17 and higher,
- Mozilla Firefox 69 and higher.

Note Microsoft Internet Explorer is not supported.

10.2 Login

Log in to the camera web interface by using the IP address of your camera.

Follow this procedure:

1. Do one of the following:
   a. Identify your camera by the MAC address (printed on the back of the camera) in FLIR IP Config, and then double-click it.
   b. Type the IP address of your camera into the address bar of a web browser.

   This displays the login view.
2. When logging in for the first time, log in with the username *admin* and the default administrator password provided by FLIR (available on the camera calibration certificate). It is possible to change the administrator password after the first login, and some cameras will require this.

Note

- Store the calibration certificate with the default administrator password in a safe place. If the new password is later on forgotten or lost, the camera needs to be reset to factory defaults by using the factory reset button, see 16 *Indicator LEDs and factory reset button*, page 54.
- The users *viewer* and *user* are disabled by default, but can be enabled by an *admin* user.
- It is possible for several users of the type *viewer* and *user* to log in to the camera at the same time. Any changes to the settings and adjustments to an image made by one *user* will be seen by the other logged in users.
- If you are logged in as an *admin* user, you will be logged out if another *admin* logs in.

10.3 Navigation

This image shows what the camera web interface looks like when you have logged in.

Note Depending on the size of the camera web interface window, the layout may be different.



Figure 10.1 Camera web user interface

1. Tabs
   Available tabs depend on user type;
   - An *admin* sees the *Camera*, *Administration*, *Settings*, and *Library* tabs.
   - A *user* sees the *Camera*, *Settings*, and *Library* tabs.
   - A *viewer* sees the *Camera* tab.
2. Live image
   This is where the live image is presented of what the camera is currently targeting.
3. Toolbar
   The toolbar options are grouped into the following categories;
   - *Measurement tools*
   - *Data presentation modes*
   - *Calibration tools*
   - *View modes*
4. Active measurements
   Any measurement tools added to the image are displayed and managed from here.

10.4 *Camera* tab

The *Camera* tab is the default tab after logging in. Here it is possible to view the live image stream from the camera, make measurements, set alarms, take snapshots, calibrate the camera, manage image settings, etc.

Note Available functionality depends on the type of your FLIR camera; Image Streaming camera or Smart Sensor camera.

10.4.1 Working with measurement tools

To measure a temperature, you can use one or more measurement tools, e.g., a spot, a box, or a delta. The measurement tools are labeled with a number for identification, according to the order of their creation. Added measurement tools show up in the *Active measurements* section, where the they can be managed and where the measured temperatures are displayed.

10.4.1.1 Spot

A spot measurement tool shows the temperature of a specific spot in the image. It is possible to add up to ten spots.

To add a spot measurement tool, follow this procedure:

1. On the toolbar and in the *Measurement tools* section, click *Spot*.
2. In the image, click to insert the spot. The tool is labeled with a number, and it is also displayed in the *Active measurements* section.

3. To move the tool, click and hold the tool label in the image, and then move it into position.
4. To configure *Settings* for the tool, click ••• next to the tool in the *Active measurements* section. This displays the *Settings* dialog box.
   4.1. To change the label of the tool, change the *Spot name*.
   4.2. To set local parameters for the tool, see section 10.4.3.2 *Local parameters*, page 24.
5. To associate an alarm with the tool, see section 10.4.2 *Working with alarms*, page 20.
6. To remove the tool, click *Settings* ••• next to the tool in the *Active measurements* section, and then click *Delete measurement*.

10.4.1.2 Box

A box measurement tool can show the minimum temperature, the maximum temperature, and the average temperature within a selected area of the image. It is possible to have up to ten boxes and masks at the same time.

To add a box measurement tool, follow this procedure:

1. On the toolbar and in the *Measurement tools* section, click *Box*.
2. In the image, click and then draw a box of a desired size. The tool is labeled with a number, and it is also displayed in the *Active measurements* section.
3. To move the tool, click and hold the tool label in the image, and then move it into position.
4. To resize the tool, click and hold one of the corners of the box in the image, and then move it to the desired size and shape.
5. To configure *Settings* for the tool, click ••• next to the tool in the *Active measurements* section. This displays the *Settings* dialog box.
   5.1. To change the label of the tool, change the *Box name*.
   5.2. To select what measurement results to display, use the *Maximum*, *Minimum*, and *Average* check boxes.
   5.3. Use the *Local options* to adjust the temperature scale according to the temperatures of the tool. For more information, see section 10.4.10 *Adjusting the temperature scale*, page 28.
   5.4. To display how much of the tool is covered by an isotherm, select the *Iso* check box. This setting is only applicable if you have selected a color alarm (isotherm). For more information, see section 10.4.5.2 *Isotherms*, page 25.
   5.5. To set local parameters for the tool, see section 10.4.3.2 *Local parameters*, page 24.
6. To associate an alarm with the tool, see section 10.4.2 *Working with alarms*, page 20.
7. To remove the tool, click *Settings* ••• next to the tool in the *Active measurements* section, and then click *Delete measurement*.

10.4.1.3 Measurement mask

Use the measurement mask tool to capture and measure more complex shapes in the image, for example the outlines of an electrical switch. It is possible to have up to ten masks and boxes at the same time. Note that one mask can contain one or several different shapes. However, only one *Maximum*, one *Minimum*, and one *Average* temperature will be displayed for the mask.

To add a measurement mask tool, follow this procedure:

1. On the toolbar and in the *Measurement tools* section, click *Measurement mask*.
2. In the image, click to insert the starting point of the mask. Move the pointer and click to insert the next point. Continue until you have the captured the desired shape. Finish by clicking the starting point. The tool is labeled with a number, and it is also displayed in the *Active measurements* section.

3. To configure *Settings* for the tool, click ••• next to the tool in the *Active measurements* section. This displays the *Settings* dialog box.
    3.1. To change the label of the tool, change the *Mask name*.
    3.2. To select what measurement results to display, use the *Maximum*, *Minimum*, and *Average* check boxes.
    3.3. Use the *Local options* to adjust the temperature scale according to the temperatures of the tool. For more information, see section 10.4.10 *Adjusting the temperature scale*, page 28.
    3.4. To display how much of the tool is covered by an isotherm, select the *Iso* check box. This setting is only applicable if you have selected a color alarm (isotherm). For more information, see section 10.4.5.2 *Isotherms*, page 25.
    3.5. To add another shape to the tool, click *Draw* and then draw the shape.
    3.6. To set local parameters for the tool, see section 10.4.3.2 *Local parameters*, page 24.
4. To associate an alarm with the tool, see section 10.4.2 *Working with alarms*, page 20.
5. To remove the tool, click *Settings* ••• next to the tool in the *Active measurements* section, and then click *Delete measurement*.

10.4.1.4 Line

A line measurement tool shows the temperature along a specific line in the image. It is possible to add two lines.

To add a line measurement tool, follow this procedure:

1. On the toolbar and in the *Measurement tools* section, click *Line*.
2. In the image, click a starting point and then draw the line to the desired length. The tool is labeled with a number, and it is also displayed in the *Active measurements* section.
3. To move the tool, click and hold the tool label in the image, and then move it into position.
4. To change the length of the tool, click one of the end points, and then move it to the desired length.
5. To configure *Settings* for the tool, click ••• next to the tool in the *Active measurements* section. This displays the *Settings* dialog box.
    5.1. To change the label of the tool, change the *Line name*.
    5.2. To select what measurement results to display, use the *Maximum*, *Minimum*, and *Average* check boxes.
    5.3. Use the *Local options* to adjust the temperature scale according to the temperatures of the tool. For more information, see section 10.4.10 *Adjusting the temperature scale*, page 28.
    5.4. To set local parameters for the tool, see section 10.4.3.2 *Local parameters*, page 24.
    5.5. To add a temperature graph under the live image representing the tool, click the *Display temperature graph* check box.
6. To associate an alarm with the tool, see section 10.4.2 *Working with alarms*, page 20.
7. To remove the tool, click *Settings* ••• next to the tool in the *Active measurements* section, and then click *Delete measurement*.

10.4.1.5 Polyline

A polyline measurement tool can show the minimum temperature, the maximum temperature, and the average temperature within a polyline drawn on the image. It is possible to add one polyline.

To add a polyline measurement tool, follow this procedure:

1. On the toolbar and in the *Measurement tools* section, click *Polyline*.

2. In the image, click to insert the starting point of the polyline. Move the pointer and click to insert the next point. Continue until you have the desired shape. Finish by clicking *Confirm*. The tool is labeled with a number, and it is also displayed in the *Active measurements* section.
3. To move the tool, click and hold the tool label in the image, and then move it into position.
4. To configure *Settings* for the tool, click ••• next to the tool in the *Active measurements* section. This displays the *Settings* dialog box.
   4.1. To change the label of the tool, change the *Polyline name*.
   4.2. To select what measurement results to display, use the *Maximum*, *Minimum*, and *Average* check boxes.
   4.3. Use the *Local options* to adjust the temperature scale according to the temperatures of the tool. For more information, see section 10.4.10 *Adjusting the temperature scale*, page 28.
   4.4. To set local parameters for the tool, see section 10.4.3.2 *Local parameters*, page 24.
   4.5. To add a temperature graph of the tool under the live image, click the *Display temperature graph* check box.
5. To associate an alarm with the tool, see section 10.4.2 *Working with alarms*, page 20.
6. To remove the tool, click *Settings* ••• next to the tool in the *Active measurements* section, and then click *Delete measurement*.

10.4.1.6 Delta

Use the delta measurement tool to calculate the difference between two measurement results, or between a measurement result and a fixed temperature (reference temperature).

To add a delta measurement tool, follow this procedure:

1. On the toolbar and in the *Measurement tools* section, click *Delta*. The tool is displayed in the *Active measurements* section.
2. In the *Active measurements* section, click *Settings* •••. The *Delta settings* dialog box appears.
3. To change the label of the tool, change the *Delta name*.
4. In the *Variable 1* and *Variable 2* lists, select the measurement results you want to use in the calculation.
5. Click *Save changes*.

10.4.1.7 Reference temperature

The reference temperature can be used as a value which the measured values can be compared with.

To add a reference temperature, follow this procedure:

1. On the toolbar and in the *Measurement tools* section, click *Reference temperature*. The tool is displayed in the *Active measurements* section.
2. In the *Active measurements* section, click *Settings* •••. The *Reference temperature* dialog box appears.
3. To change the label, change the *Reftemp name*.
4. In the *Value* box, type the temperature to be used as reference.
5. Click *Save changes*.

10.4.2 Working with alarms

You can make the camera trigger an alarm when certain conditions are met. An alarm can be triggered by several different sources, such as a measurement result in the image, a digital input, or an internal temperature sensor.

When an alarm is triggered, the camera can perform one or more tasks, e.g. save an image or video sequence to camera memory, or send the image/video by e-mail to predefined recipients or to an FTP site. The camera can also further trigger a variety of external devices, using the digital output.

All active alarms are listed in the *Active alarms* section. A triggered alarm turns red in the *Active alarms* section. Also, the label of the measurement tool in the image turns red.

10.4.2.1 Setting an alarm based on a measurement result

To configure an alarm based on the measurement result from a spot, box, or delta measurement tool, follow this procedure:

1. In the *Active Measurements* section, click the plus sign under *Add alarm* next to the measurement result to be used for the alarm. The *Add alarm* dialog box appears.
2. In the *Alarm label* section, type an *Alarm name*.
3. In the *Trigger* section, select the *Condition* and temperatures that will trigger this alarm:

Below	Triggers an alarm when the temperature is below the specified *Threshold* value. Also type a *Hysteresis* value.
Above	Triggers an alarm when the temperature is above the specified *Threshold* value. Also type a *Hysteresis* value.
Interval	Triggers an alarm when the temperature is within the specified *Min value* and *Max value*.

   Hysteresis is the interval within which the temperature value is allowed to vary without causing a change in the trigger. If the threshold is set above 30.0°C and the hysteresis is set at 2.0°C, the trigger goes high when the temperature rises above 30.0° C and stays high until the temperature drops below 28.0°C. In contrast, if the threshold is set below 30.0°C, and the same hysteresis value is kept, the trigger goes high if the temperature drops below 30.0°C and stays high until the temperature rises above 32.0°C.
4. In the *Threshold time* box, type the amount of time that has to pass before an alarm is triggered. This can be used to avoid false alarms.
5. In the *Action* section, select which actions the camera will perform when an alarm is triggered:

Digital OUT	Outputs a digital pulse. Also, type a pulse length (in milliseconds) in the *Pulse time* box.
E-mail	Automatically sends the captured *Image*, *Result*, or *Video* to the recipients defined in *Settings* > *Alarm recipients*. For more information, see section 10.6.2 *Alarm recipients*, page 33.
Send to FTP	Automatically sends the captured *Image* or *Video* to the FTP site defined in *Settings* > *Alarm recipients*. For more information, see section 10.6.2 *Alarm recipients*, page 33.
Save to camera	Automatically saves the captured *Image* or *Video* to the memory of the camera.
During alarm	Temporarily disables the periodic calibration while the image/ video is being captured.

   The image/video can later be viewed and managed under the *Library* tab:

   - the captured image frame that triggered the alarm,
   - the 5 second video sequence when the alarm was triggered.
6. When completed, click *Set alarm*. The alarm is now listed under *Active alarms*.

10.4.2.2 Setting an alarm based on the digital input

To configure an alarm based on the digital input, follow this procedure:

1. In the *Active Measurements* section, click the plus sign under *Add alarm* next to the digital input result to be used for the alarm. The *Alarm* dialog box appears.
2. In the *Alarm label* section, type an *Alarm name*.
3. In the *Trigger* section and in the *Value* list; select "0" to trigger the alarm on a low signal or select "1" to trigger on a high signal.
4. In the *Action* section, select which actions the camera will perform when an alarm is triggered:

Digital OUT	Outputs a digital pulse. Also, type a pulse length (in milliseconds) in the *Pulse time* box.
E-mail	Automatically sends the captured *Image*, *Result*, or *Video* to the recipients defined in *Settings* > *Alarm recipients*. For more information, see section 10.6.2 *Alarm recipients*, page 33.
Send to FTP	Automatically sends the captured *Image* or *Video* to the FTP site defined in *Settings* > *Alarm recipients*. For more information, see section 10.6.2 *Alarm recipients*, page 33.
Save to camera	Automatically saves the captured *Image* or *Video* to the memory of the camera.
During alarm	Temporarily disables the periodic calibration while the image/video is being captured.

   The image/video can later be viewed and managed under the *Library* tab:

   - the captured image frame that triggered the alarm,
   - the 5 second video sequence when the alarm was triggered.

5. When completed, click *Set alarm*. The alarm is now listed under *Active alarms*.

10.4.2.3 Setting an alarm based on sensor temperature

The internal temperature sensor can act as a thermometer for the ambient temperature. To configure an alarm based on the internal temperature sensor, follow this procedure:

1. In the *Active Measurements* section, click the plus sign under *Add alarm* next to the *Sensor temperature*. The *Alarm* dialog box appears.
2. In the *Alarm label* section, type an *Alarm name*.
3. In the *Trigger* section, select the *Condition* and temperatures that will trigger this alarm:

Below	Triggers an alarm when the temperature is below the specified *Threshold* value. Also type a *Hysteresis* value.
Above	Triggers an alarm when the temperature is above the specified *Threshold* value. Also type a *Hysteresis* value.
Interval	Triggers an alarm when the temperature is within the specified *Min value* and *Max value*.

   Hysteresis is the interval within which the temperature value is allowed to vary without causing a change in the trigger. If the threshold is set above 30.0°C and the hysteresis is set at 2.0°C, the trigger goes high when the temperature rises above 30.0°C and stays high until the temperature drops below 28.0°C. In contrast, if the threshold is set below 30.0°C, and the same hysteresis value is kept, the trigger goes high if the temperature drops below 30.0°C and stays high until the temperature rises above 32.0°C.
4. In the *Threshold time* box, type the amount of time that has to pass before an alarm is triggered. This can be used to avoid false alarms.

5. In the *Action* section, select which actions the camera will perform when an alarm is triggered:

Digital OUT	Outputs a digital pulse. Also, type a pulse length (in milliseconds) in the *Pulse time* box.
E-mail	Automatically sends the captured *Image*, *Result*, or *Video* to the recipients defined in *Settings* > *Alarm recipients*. For more information, see section 10.6.2 *Alarm recipients*, page 33.
Send to FTP	Automatically sends the captured *Image* or *Video* to the FTP site defined in *Settings* > *Alarm recipients*. For more information, see section 10.6.2 *Alarm recipients*, page 33.
Save to camera	Automatically saves the captured *Image* or *Video* to the memory of the camera.
During alarm	Temporarily disables the periodic calibration while the image/video is being captured.

   The image/video can later be viewed and managed under the *Library* tab:

   - the captured image frame that triggered the alarm,
   - the 5 second video sequence when the alarm was triggered.

6. When completed, click *Set alarm*. The alarm is now listed under *Active alarms*.

10.4.3 Changing object parameters

For accurate measurements, the camera must be provided with certain object parameters:

- *Emissivity*
  How much radiation an object emits, compared with the radiation of a theoretical reference object at the same temperature (called a "blackbody"). The opposite of emissivity is reflectivity. The emissivity determines how much of the radiation originates from the object as opposed to being reflected by it.
- *Reflected temperature*
  This is used when compensating for the radiation from the surroundings reflected by the object into the camera. This property of the object is called reflectivity.
- *Distance*
  The distance between the camera and the object of interest.
- *Relative humidity*
  The relative humidity of the air between the camera and the object of interest.
- *Atmospheric temperature*
  The temperature of the air between the camera and the object of interest.
- *External IR window*
  Used if any protective windows etc. are set up between the camera and the object of interest. When the setting is on, the following parameters can be set:
  - *Transmission*: How much of the thermal radiation passes through the window.
  - *Temperature*: The temperature of the window.

You can set the object parameters globally. You can also change the *Emissivity*, *Reflected temperature*, and *Distance* parameters locally for a measurement tool.

Note

- The local parameter settings override the global values.
- Of the object parameters, *Emissivity* and *Reflected temperature* are the two most important to set correctly in the camera.

10.4.3.1 Global parameters

The global parameters are shown in the bottom right corner of the screen, below the *Active measurements* section.

To change the global parameters, follow this procedure:

1. In the bottom right corner of the screen, click to select the parameter to change.
2. Change the parameter to the desired value, and then press Enter or click anywhere on the screen.
3. To reset the global parameters to the default values provided by FLIR, click *Reset*.

10.4.3.2 Local parameters

The local parameter settings override the global values. To change the local parameters, follow this procedure:

1. In the *Active measurements* section, click *Settings* ••• next to the tool for which you want to change the parameters. The *Settings* dialog box appears.
2. To activate the use of local parameters, select the *Local parameters* check box. The values for the *Emissivity*, *Reflected* temperature, and *Distance* parameters are now editable.
3. To deactivate the use of local parameters, deselect the *Local parameters* check box.
4. When completed, click *Save changes*.

10.4.4 Working with image modes

The camera captures both thermal and visual images at the same time. By your choice of image mode, you select which type of image to display on the screen.

The camera supports the following image modes:

- *Thermal*: The camera displays a fully thermal image.

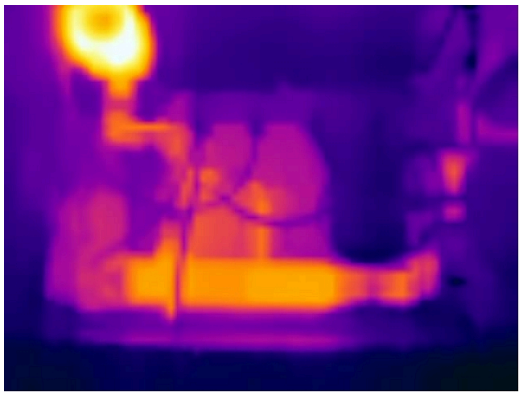

- *MSX* (Multi Spectral Dynamic Imaging): The camera displays the thermal image where details from the visual image have been added.



- *Visual*: The camera displays the visual image captured by the visual camera.

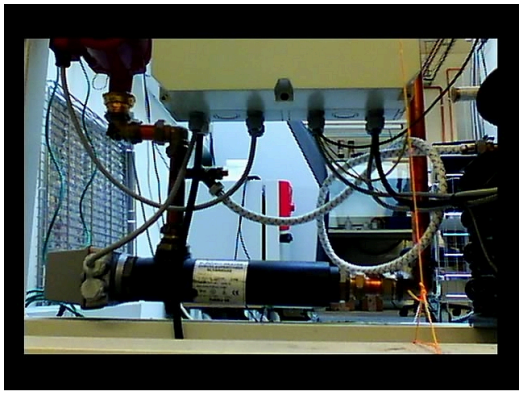

- *FSX* (Flexible Scene Enhancement): The camera displays the thermal image with enhanced image details. This image mode is useful when higher contrast is required, for example when the camera is used in a surveillance application.

Note The availability of the visual camera depends on the lens model. When the visual camera is disabled, only the image modes *Thermal* and *FSX* are available.

To select the image mode, follow this procedure:

1. On the toolbar and in the *Data presentation modes* section, click *Image mode*.
2. Select one of the available image modes.

10.4.5 Colorizing the image

The camera can colorize the image in different ways. You can select different color palettes or apply color alarms (isotherms).

10.4.5.1 Palette

You can change the palette that the software uses to display the different temperatures within an image. A different palette can make it easier to analyze the image. The most suitable palette for a certain application depends on many different factors, such as the target temperature and emissivity, the ambient temperature, and the distance to the target. You will need to test different palettes in order to find the one that best suits your application.

To change the palette, follow this procedure:

1. On the toolbar and in the *Data presentation modes*, click *Palette*.
2. Select one of the available palettes.

10.4.5.2 Isotherms

By using color alarms (isotherms), anomalies can easily be discovered in an infrared image. The isotherm command applies a contrasting color to all pixels with a temperature above, below, or between the set temperature levels.

The camera supports the following isotherms:

- *Above*
  Applies a contrasting color (red) to all pixels with a temperature above the specified temperature level.

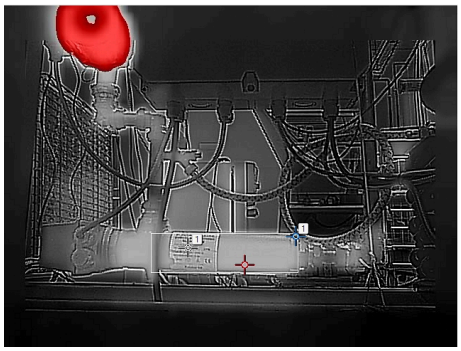

- *Below*
  Applies a contrasting color (blue) to all pixels with a temperature below the specified temperature level.

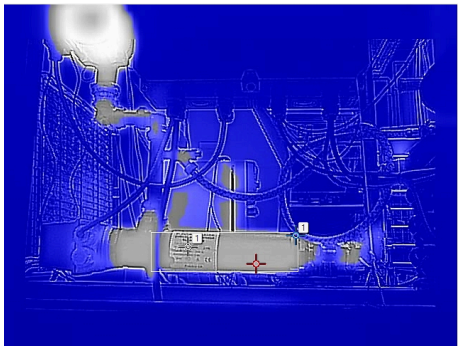

- *Interval*
  Applies a contrasting color (yellow) to all pixels with a temperature between two specified temperature levels.

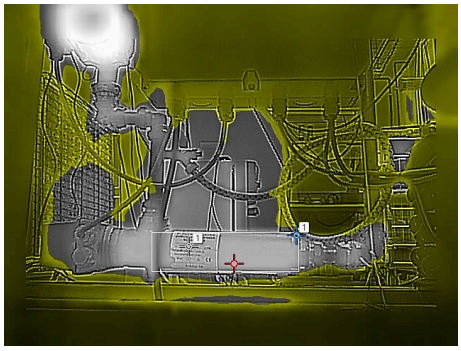

To configure an isotherm, follow this procedure:

1. On the toolbar and in the *Data presentation modes* section, click *Isotherm*.
2. Select one of the available isotherms.
3. When a color alarm is selected, it is displayed in the *Active measurements* section. Also, a temperature indicator is added to the left side of the temperature scale located to the right of the image.
4. To change the threshold temperature, click *Settings* ••• next to the isotherm in the *Active measurements* section. The *Settings* dialog box appears.
5. In the *Range* section, set the threshold temperature of the isotherm:
   - *Above*; type a threshold temperature in the *From* box.
   - *Below*; type a threshold temperature in the *To* box.
   - *Interval*; type the interval temperatures in the *To* and *From* boxes.
6. Optionally, change the contrasting color in the *Highlight color* section.
7. When completed, click *Save changes*.

10.4.6 Auto-adjust region

By using the *Auto-adjust region* feature it is possible to select an area of the image, and then have the colorization of the image adjusted based on the temperatures within that selected area.

To configure an auto-adjust region, follow this procedure:

1. On the toolbar and in the *Data presentation modes* section, click *Auto-adjust region*.
2. In the image, click and then draw a region of a desired size.
3. To move the region, click and hold the region label in the image, and then move it into position.
4. To resize the region, click and hold one of the corners of the region in the image, and then move it to the desired size and shape.
5. To remove the region, click *X* in the region label.

10.4.7 Calibrating the camera

The calibration of the camera is performed as a non-uniformity correction (NUC). A NUC is *an image correction carried out by the camera software to compensate for different sensitivities of detector elements and other optical and geometrical disturbances*[1].

Calibration is needed whenever the output image becomes spatially noisy. This may, for example, happen when the ambient temperature changes. The calibration can be carried out automatically with different selectable intervals. It is also possible to perform a calibration manually.

10.4.7.1 Automatic calibration

To set the automatic calibration, follow this procedure:

1. On the toolbar and in the *Calibration tools* section, click *Calibration*. This displays a list of calibration options.
2. Click one of the options:

Option	Calibration is automatically carried out:
Auto	when needed.
Every 10 min	approximately every 10 minutes, or when needed.
Every 30 min	approximately every 30 minutes, or when needed.
Every 60 min	approximately every 60 minutes, or when needed.
Every [type your value]	at any set interval.
OFF	never (automatic calibration disabled).

3. While the automatic calibration is in progress, the *Notification* text *Calibration in progress ...* is temporarily displayed under the live image.

10.4.7.2 Manual calibration

To perform a manual calibration, follow this procedure:

1. On the toolbar and in the *Calibration tools* section, click *Calibration*. This displays a list of calibration options.
2. Click *Calibrate now*.
3. While the manual calibration is in progress, the *Notification* text *Calibration in progress ...* is temporarily displayed under the image on the screen

1. Definition from the impending international adoption of DIN 54190-3 (Non-destructive testing—Thermographic testing—Part 3: Terms and definitions).

10.4.8 MSX alignment

For correct alignment of the thermal and visual images, the camera needs input on the distance to the objects of interest. Note that this is only required for the FLIR A40/A50/A70 cameras with 29° and 51° lenses, since MSX is not supported by cameras with 95° lenses.

10.4.9 Changing the temperature range

For accurate measurements, it is recommended to use the temperature range closest to the temperature of the object being monitored. For example, if the hottest object in the scene is 87°C, the temperature range "-20°C to 120°C" should be used.

The temperature range is visible to the right of the live image. Click *Range* and select a suitable range from the list.

For Image Streaming cameras, the temperature range can also be changed over GenICam.

10.4.10 Adjusting the temperature scale

The camera continuously auto-adjusts the image for the best image brightness and contrast. In some situations, manual adjustments can make it easier to analyze details in the image. For example, by manually changing the maximum and/or minimum temperature levels to levels near a certain object in the image, you can study temperature variations in the object.

The temperature scale is visible to the right of the live image. When a temperature level is manually adjusted, the *Auto* button is displayed next to the temperature scale box.

To manually adjust the image, follow this procedure:

1. To change the **maximum** temperature level, type the temperature in the upper temperature scale box. As an alternative, click and hold the upper temperature bar on the scale, and then move it into position. Watch the temperature in the scale box change as you move the bar.
2. To change the **minimum** temperature level, type the temperature in the lower temperature scale box.As an alternative, click and hold the lower temperature bar on the scale, and then move it into position. Watch the temperature in the scale box change as you move the bar.
3. To return to auto-adjustment, click the *Auto* button(s).

10.4.11 Flipping the image

The image can be flipped horizontally or vertically.

Normal



Horizontal flip

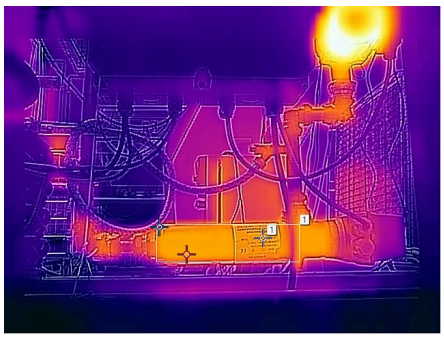

Vertical flip

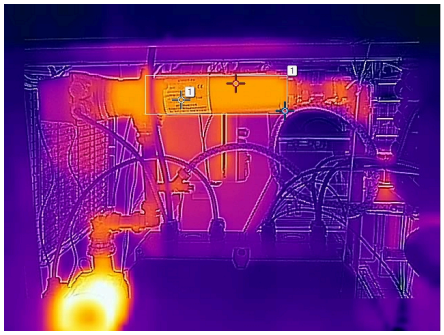

Horizontal + vertical flip

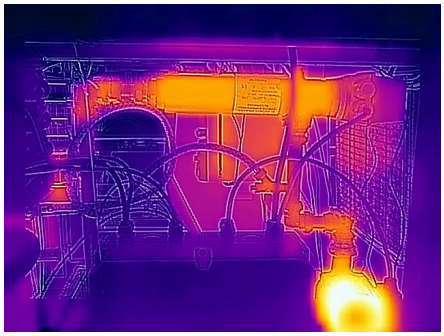

To change the flip setting, follow this procedure:

1. On the toolbar and in the *View modes* section, click  to flip the image horizontally or click  to flip the image vertically.

10.4.12 Full screen view

To view the image in full screen, follow this procedure:

1. On the toolbar and in the *View modes* section, click *Full screen*.
2. To return to normal view, press the Esc (Escape) key on the computer keyboard.

10.4.13 Saving a snapshot

It is possible to take a snapshot and save the image with the current measurement results. The image can later be viewed and managed on the *Library* tab. Up to 100 images can be saved.

To take a snapshot, follow this procedure:

1. On the toolbar and in the *View modes* section, click *Snapshot*.
2. The *Notification* text *Snapshot stored* is temporarily displayed under the live image.

10.4.14 Pausing the live image stream

To pause or freeze the live image stream, follow this procedure:

1. On the toolbar and in the *View modes* section, click *Freeze*.
2. To resume the live image stream, click *Unfreeze*.

10.4.15 Hiding the overlay graphics

To hide all overlay graphics in the live image, follow this procedure:

1. On the toolbar and in the *View modes* section, click *Hide overlay*.
2. To show any hidden overlay graphics, click *Show overlay*.

10.4.16 Filter levels

The filter level affects how much the raw image is filtered before it is presented to the user. Depending on the scene, the filters can provide a better image quality. Different applications might benefit from different filters, and it is recommended to try the available filter levels for each application. The measurement accuracy is not affected by the filters.

10.4.17 Camera presets

It is possible to save the current camera setup, including measurement tool configurations, alarms, and colorization settings. The zipped file with the presets is saved to disk in your Downloads folder. It can later on be uploaded and applied.

10.4.17.1 Saving a preset

To save the current camera setup, follow this procedure:

1. In the *Active measurements* section, click *Save preset*.

10.4.17.2 Loading a preset

To load a saved preset file, follow this procedure:

1. In the *Active measurements* section, click *Load preset*. The standard Windows Open dialog box appears.
2. Browse to the Downloads folder (or to the folder where you have stored the preset files).
3. Select the file, and then click *Open*. This loads and applies the presets.

10.5 Administration tab

Note The *Administration* tab is only available for the *admin* role.

Under the *Administration* tab you can for example, manage firewall and network settings and see system and firmware details.

10.5.1 Firewall

Use the settings on the *Firewall* page to configure how the functions and services of the camera are allowed to be accessed.

Note The services also need to be enabled which is done on the *Services* page.

10.5.2 SSL certificates

A network client program that is setup to communicate with or control the camera remotely must be approved first, which is done on the *SSL certificates* page. The client uploads a certificate which is then shown in the *Certificates* list, and then the camera administrator can approve the client. Approved clients can be revoked later on.

Temporarily enable the *Auto approve* functionality while setting up the network clients. However, it is recommended to disable *Auto approve* when all setup is completed.

10.5.3 Services

Use the *Services* page to enable and disable the services of the camera.

Available services:

- *Ethernet/IP*
  Enable this service when the camera is to communicate using industrial protocols such as Modbus TCP and Ethernet/IP. The camera can be used as either a *Modbus client* or a *Modbus server*. The settings for the *Modbus client* are located under the *Settings* tab. If the camera should be used as a *Modbus server*, the registers can be downloaded from the FLIR Customer support site.
- *Pantilt server*
  Enable this service when the camera is connected to a Pan & Tilt unit. If the camera is connected to the unit using an RS-232/485 interface, it can control the unit from the *Camera* tab or by using ONVIF.
- *httpResource*
  The *httpResource* service is an old way of controlling the camera. It should only be enabled if legacy FLIR software is used.
- *ONVIF*
  Enable this service when the camera is to communicate with Video Management Systems (VMS) over ONVIF. If the service is disabled, the camera will not be discovered by third-party VMS. Note that the Advanced configuration is required on the camera for ONVIF to work.

After enabling the service, also click *Apply* to initialize it. When enabled, settings for the *ONVIF users* can be managed.

- *ONVIF users*
  This section controls the ONVIF users and credentials, and it is only accessible if the *ONVIF* service is active.
  Default credentials are; *user name = fliruser* and *password = 3vlig*.

Note The services also need to be allowed to be accessed which is done on the *Firewall* page.

10.5.4 Web protocols

Use the *Web protocols* page to configure which web protocol to use when accessing the camera; *http* or *https*.

10.5.5 User management

Use the *User management* page to enable and disable user roles, and to change passwords.

Note

- The *viewer* and *user* roles are disabled by default.
- A hard factory reset of the camera will reset the administrator password to the default password. See 16 *Indicator LEDs and factory reset button*, page 54.

10.5.6 Regional settings

Use the *Regional settings* page to set *Date and time* and preferred *Units*.

Date and time can be set in four ways:

1. Get date and time from an *SNTP Server* (Simple Network Time Protocol):
   Select the *Enable* check box, and then type the IP address of the SNTP Server in the *Server address* box.
2. Set date and time manually:
   Select the correct *Time zone* in the list, and then type date and time information in the *Year*, *Month*, *Day*, *Hour*, *Minute*, and *Second* boxes.
3. Get date and time from your internet browser:
   Click *Read from browser*.
4. Get date and time from your camera:
   Click *Read from camera*.

Available *Units* are:

- *Celsius (C)* and *Fahrenheit (F)*
- *Meter (m)* and *Foot (ft)*

10.5.7 Network settings

Use the *Network settings* page to manage the network setup and to select the streaming bit rate.

Note When altering the network settings, the address of the camera might change. Make sure your settings are correct before saving them or the camera might not be reachable afterwards. If this occurs, you can use FLIR IP Config to locate the camera again or reset the camera to its default settings.

10.5.7.1 Ethernet setup

Follow this procedure:

1. In the navigation pane, click *Network settings*.

2. Select one of the following:
   - To automatically obtain an IP address for the camera, click *Obtain IP address automatically (DHCP)*.
   - To manually set an IP address for the camera, click *Manual configuration*, and then type valid network information in the *IP*, *Subnet mask*, and *Gateway* boxes.
3. Click *Apply*.

10.5.7.2 Wireless

The *Wireless* connection can be set to *Off*, *Server mode*, or *Client mode*.

In *Server mode*, you configure the camera itself to act as a wireless server allowing other devices to connect, such as mobile phones or tablets. This is useful in situations where no other network exists. In *Client mode* you connect the camera to an existing network.

To let the camera act as a wireless server, follow this procedure:

1. In the navigation pane, click *Network settings*.
2. Click *Server mode*.
3. Type a *Network name* and a *Password* for accessing the network.
4. Click *Share network*.
   The camera will now act as a "hotspot" that computers or tablets (with high resolution) can connect to. When a wireless connection has been established, the camera will be available at the IP address 192.168.16.1.

To connect the camera to an existing network, follow this procedure:

1. In the navigation pane, click *Network settings*.
2. Click *Client mode*.
3. Click *Scan networks*.
4. Select one of the *Available networks* in the list, and then click *Connect*.
5. Type the *Password* for accessing the network, and then click *Connect*.

10.5.7.3 Streaming bit rate

Follow this procedure:

1. In the navigation pane, click *Network settings*.
2. In the *Streaming bit rate* list, select one of the available bit rates.
3. Click *Apply*.

10.5.8 System and firmware

The *System and firmware* page displays *System version*, *Software details*, and *Hardware details* of the camera. In the *System* section, you can restart the camera, reset the camera to factory settings, or upgrade the camera firmware.

10.5.8.1 Restart camera

Follow this procedure:

1. In the navigation pane, click *System and firmware*.
2. In the *System* section, click *Restart camera*. This displays a dialog box.
3. In the dialog box, click *OK*. The camera will restart.

10.5.8.2 Reset camera to factory settings

A factory reset will affect all camera settings, including regional settings. Saved images will not be affected.

Follow this procedure:

1. In the navigation pane, click *System and firmware*.
2. In the *System* section, click *Reset to factory settings*. This displays a dialog box.
3. In the dialog box, click *OK*. The camera will restart.

10.5.8.3 Upgrade camera firmware

Follow this procedure:

1. In the navigation pane, click *System and firmware*.
2. In the *System* section, click *Upgrade firmware*. This displays a dialog box.
3. Click *Select file*. The standard Windows Open dialog box appears.
4. Browse to the location of the firmware file, select the file, and then click *Open*.
5. Click *Upgrade firmware*.
6. When the upgrade is completed, restart the camera.

10.5.9 SNMP settings

Use the *SNMP settings* page to enable and disable Simple Network Management Protocol (SNMP). When enabled, type the IP address of your device, and the port and interval time.

- *Sink*: The IP address to send trap messages to (trap receiver).
- *Port number*: Destination port used for trap (default port number is 162).
- *Interval*: An integer value (in seconds) between the heartbeat signals.

10.5.10 Multicast settings

Use the *Multicast settings* page to manage the settings for multicast communication, which can be used when multiple clients are using the camera video stream. Settings can be changed for each of the two video streams; IR and Visual/Digital Camera.

10.6 Settings tab

Note The *Settings* tab is only available for the *admin* and *user* roles.

Under the *Settings* tab you can manage:

- General settings
- Alarm recipients
- Scheduler
- MQTT
- Modbus

10.6.1 General settings

The *General settings* page displays *Product* information, *Camera ID*, *IP6x settings*, and the possibility to *Test Digital Input/Output* functionality.

10.6.1.1 Camera ID

Type the preferred camera ID in the *Device label* box. Select the *Display in status bar* check box to show the camera ID on the active tab of the web browser and in the upper part of saved images.

10.6.1.2 Test Digital Input/Output

Use the test buttons to the test the electrical interfaces of the camera and the communication with them. These tests are useful when you set up the interfaces.

Click *Test (5s)*. A successful test is indicated by a green “dot” for 5 seconds.

10.6.2 Alarm recipients

Use the *Alarm recipients* page to configure alarm notifications. Notifications can be sent by e-mail or to a folder on an FTP server.

To configure delivery by e-mail, follow this procedure:

1. In the navigation pane, click *Alarm recipients*.
2. In the *Alarm recipient e-mail* box, type the e-mail address of the recipient.
3. In the *Mail server setup* box, type the IP address of the sending mail server.

4. If the sending mail server requires a login (mail server authentication), select the *Authentication required* check box, and then type the credentials in the *User* and *Password* boxes.
5. Click *Apply*.

To configure delivery to FTP, follow this procedure:

1. In the navigation pane, click *Alarm recipients*.
2. In the *FTP Server IP address* box, type the IP address of the FTP server.
3. In the *Folder* box, type the path to the folder where you want to save the notifications. This can be useful if you have multiple cameras connected to the same FTP server.
4. In the *User* and *Password* boxes, type the credentials for FTP access.
5. Click *Apply*.

10.6.3 Scheduler

Use the *Scheduler* page to configure what actions to run, and when to run them. The result of an action can be sent by e-mail or to a folder on an FTP server.

Available actions are:

- *E-mail image*
  Send the image with overlay graphics.
- *E-mail result*
  Send a list of the active measurements and their respective temperatures.
- *Save image on FTP*
  Send the image with overlay graphics to an FTP server.

To schedule actions, follow this procedure:

1. In the navigation pane, click *Scheduler*.
2. Click the check boxes to select which *Scheduled actions* to use.
3. In the schedule, click the *Active* check box for the days that the action will run:
   - To run the action once a day at a certain time, also click *Once* and then set an *Action Time*.
   - To run the action several times a day, also click *Repeat* and then set a time *Interval*, a *Start action* time, and an *End action* time.
4. Click *Apply*.

To configure delivery to FTP, follow this procedure:

1. In the *FTP Server* box, type the IP address of the FTP server.
2. In the *FTP User* and *FTP Password* boxes, type the credentials for the FTP access.
3. Click *Apply*.

To configure delivery by e-mail, follow this procedure:

1. In the *Recipient e-mail* box, type the e-mail address of the recipient.
2. In the *Mail server* box, type the IP address of the sending mail server.
3. In the *Sender e-mail* box, type the e-mail address of the sender.
4. If the sending mail server requires a login (mail server authentication), select the *Authenticate mail* check box, and then type the credentials in the *User* and *Password* boxes.
5. Click *Apply*.

10.6.4 MQTT

It is possible to setup a publish/subscribe messaging transport using the MQTT protocol (MQ Telemetry Transport). Topics that are available for subscription are shown in the *Topic subscriptions* section. Note that the corresponding measurement functions and alarms must be defined and active, or no information will be published.

Follow this procedure:

1. In the navigation pane, click *MQTT*.
2. Click the *Enable MQTT* check box.

3. Type the *Broker host address* and the *TCP Broker Port* used for the subscription transport.
4. Type the *User* and *Password* to login to the broker.
5. Select preferred *Temperature unit* in the list; *Celsius (C)*, *Fahrenheit (F)*, or *Kelvin (K)*.
6. Select preferred *Output format* in the list; *Json* or *Text*.
7. Click *Apply*.
8. In your MQTT client of choice, set up a subscription for the topic corresponding to the information of interest. The topics will be updated when the data is updated, for example; if you subscribe to the topic *FLIR/ec501-xxxxxx/alarm1*, your MQTT client will receive an update when alarm1 is triggered and then another update when alarm1 criteria are no longer fulfilled. You can connect multiple cameras to the same MQTT broker.

10.6.5 Modbus

Use the *Modbus* page to configure remote transport of alarms and measurements.

10.6.5.1 Digital out

The camera has two digital outputs which can be used for remote transport of alarms. By using a Modbus controlled digital out box installed on the network it is possible to get another 10 "soft" digital outputs. In this setup the camera will act as Modbus master controlling the digital out box acting as Modbus slave.

To configure a digital out, follow this procedure:

1. In the navigation pane, click *Modbus*.
2. In the *Digital out* list, click *Configure* for the digital out number you want to use.
3. In the *Digital output entry* dialog box, type a *Name* of the entry. Also, type the *IP Address*, *Device function ID*, and Modbus *Register address* specific to the equipment.
4. Select *Type* specific to the equipment.
5. Click *Apply*.
6. To test the Modbus output, click *Test* which will activate the output for 5 seconds.
7. The digital out is now selectable in the *Digital Out* list when setting up alarms, see section 10.4.2 *Working with alarms*, page 20.

10.6.5.2 Analogue out

The camera has no analogue outputs, but by using the built-in Modbus master functionality and an analogue out box controlled over Modbus, 10 individual analogue outputs become available. By selecting the corresponding analogue output box, volt or ampere representation of a measured value is possible.

To configure an analogue out, follow this procedure:

1. In the navigation pane, click *Modbus*.
2. In the *Analogue out* list, click *Configure* for the analogue out number you want to use.
3. In the *Analogue output entry* dialog box, type a *Name* of the entry.
4. Type the following information:
    4.1. Select which *Measurement function* and *Update interval (ms)* to use. The *Update interval (ms)* defines how often a new value is sent over Modbus to the external analogue output box.
    4.2. Type the *IP Address*, *Device function ID*, and Modbus *Register address* specific to the equipment.
    4.3. Select *Type* specific to the equipment.
    4.4. Type the *Minimum temperature* and the *Maximum temperature* to be represented.
    4.5. In the *Data output at Minimum temperature* and *Data output at Maximum temperature* boxes, type the digital values to be sent over Modbus representing the *Minimum temperature* and *Maximum temperature*, respectively.

    Note The data output depends on the analogue box being used. If the box supports an analogue output of 0 to 20 mA with the resolution 12-bit, the minimum data output will be 0 and the maximum will be 4095.

5. Click *Apply*.
6. To test the Modbus output, click *Test* which will activate the output for 5 seconds.

10.7 *Library* tab

Note The *Library* tab is only available for the *admin* and *user* roles.

Under the *Library* tab you can view and manage saved images and videos from alarms and snapshots. When downloading multiple images or videos, a pop-up window will appear. Make sure it is not blocked by your internet browser.

10.7.1 Managing images

To view and manage image files, follow this procedure:

1. In the navigation pane, click *Images*.
2. To display a preview of an image, click the thumbnail of the image.
   As an alternative, click the image file name, and then click *Preview*.
3. To download an image, click the image file name, and then click *Download*.
4. To delete one or more images, click the image file name(s), and then click *Delete*.

10.7.2 Managing videos

To manage video files, follow this procedure:

1. In the navigation pane, click *Videos*.
2. To download a video, click the video file name, and then click *Download*.
3. To delete one or more videos, click the video file name(s), and then click *Delete*.

10.7.3 Managing logs

The alarms can be logged to file. To manage log files, follow this procedure:

1. In the navigation pane, click *Logs*.
2. To enable logging of alarms, click the *Logging enabled* check box.
3. To download the generated logs as a zipped file, click *Download log*.
4. To delete the generated logs, click *Clean log*.

11 Pin configurations

11.1 Ethernet connector and cable

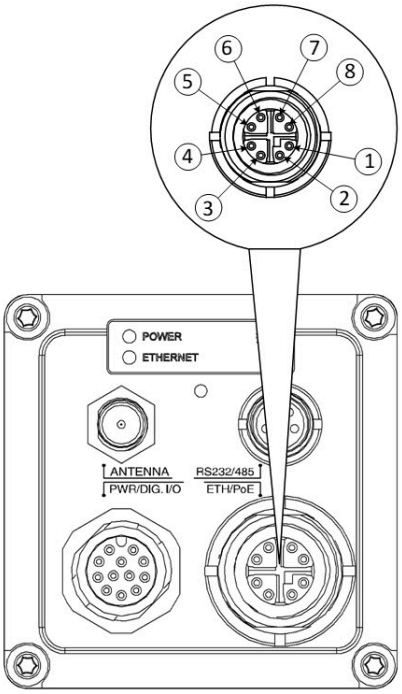

Pin	Configuration
1	DA+
2	DA-
3	DB+
4	DB-
5	DD+
6	DD-
7	DC-
8	DC+

Figure 11.1 Female X-coded M12 Ethernet connector

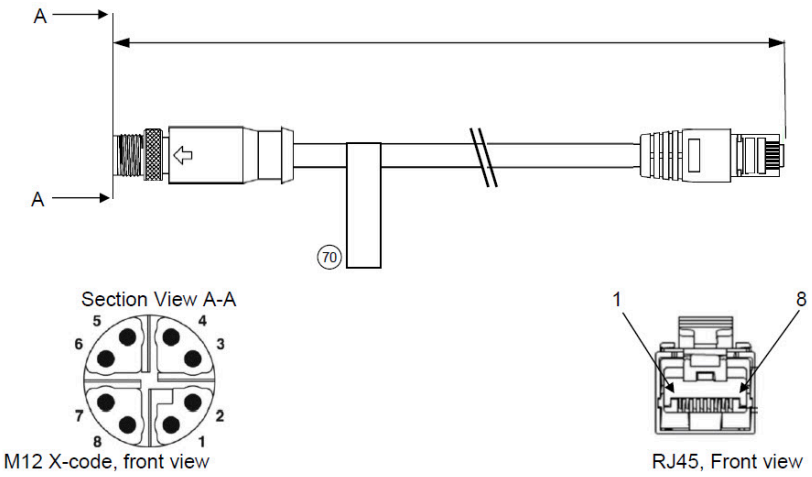

Wiring Diagram				
M12 X-code		Wire colour		RJ45
1		Orange/White		1
2		Orange		2
3		Green/white		3
4		Green		6
5		Brown/White		7
6		Brown		8
7		Blue/White		5
8		Blue		4
SHIELD	----------	Drain Wire ------	----------	SHIELD

Figure 11.2 Ethernet cable M12 to RJ45

11.2 Power/Digital I/O connector and cable

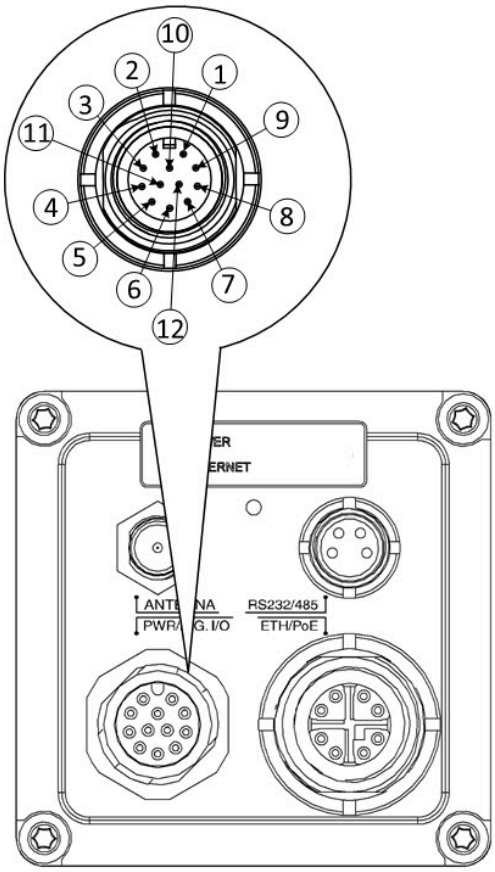

Pin	Configuration
1	EXTPWR_RTN
2	EXTPWR_IN
3	FAULT_A
4	FAULT_B
5	DIGOUT1A
6	DIGOUT1B
7	DIGOUT2A
8	DIGOUT2B
9	DIGIN1
10	DIGIN2
11	Not Connected
12	DIGIN_RTN

Figure 11.3 Male A-coded M12 Power/Digital I/O connector (T911852ACC & T911853ACC)

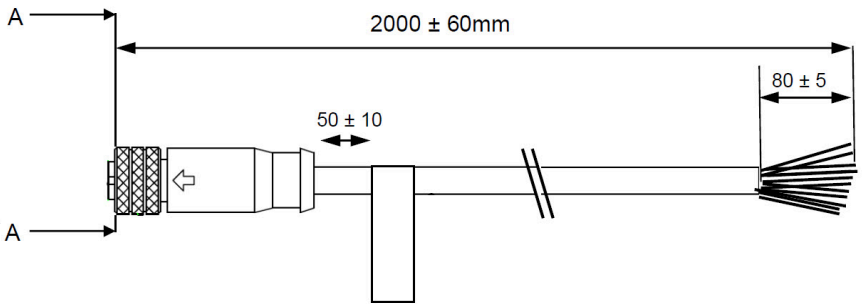



Figure 11.4 Cable M12 to pigtail

Section A—A	Wire colour
1	Black
2	Red
3	Green
4	Purple
5	Yellow
6	Pink
7	Orange
8	Brown
9	White
10	Grey
11	Light blue
12	Blue

11.3 RS232/RS485 connector

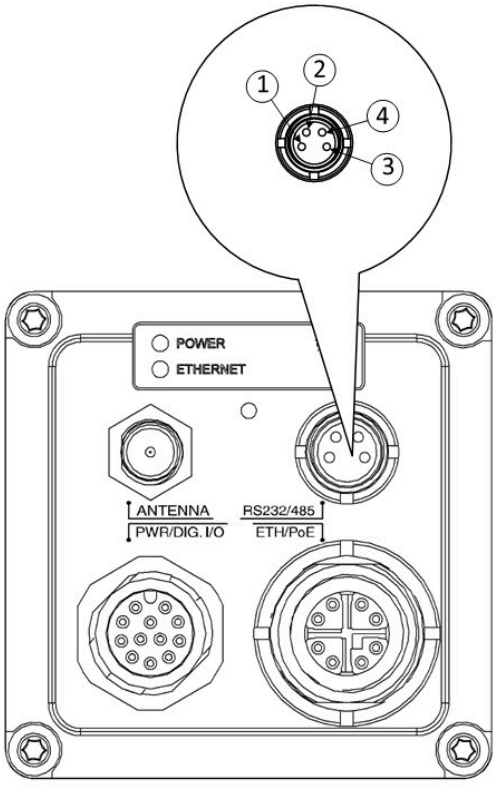

Figure 11.5 Male A-coded M8 RS232/RS485 connector

Pin	Configuration
1	RS232_TXD alt RS485A
2	RS232_RXD alt RS485B
3	Chassie GND
4	Not Connected

12 A-series connection board

The A-series connection board is an accessory that can be used to test functionality and digital connections to/from the camera.

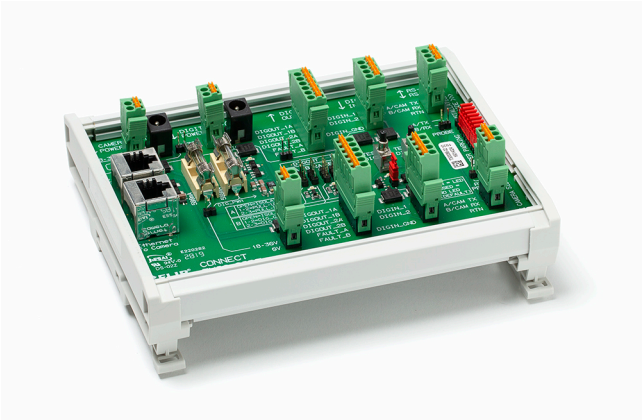

Figure 12.1 A-series connection board

For schematics and connection examples, see the next pages.

Installation side

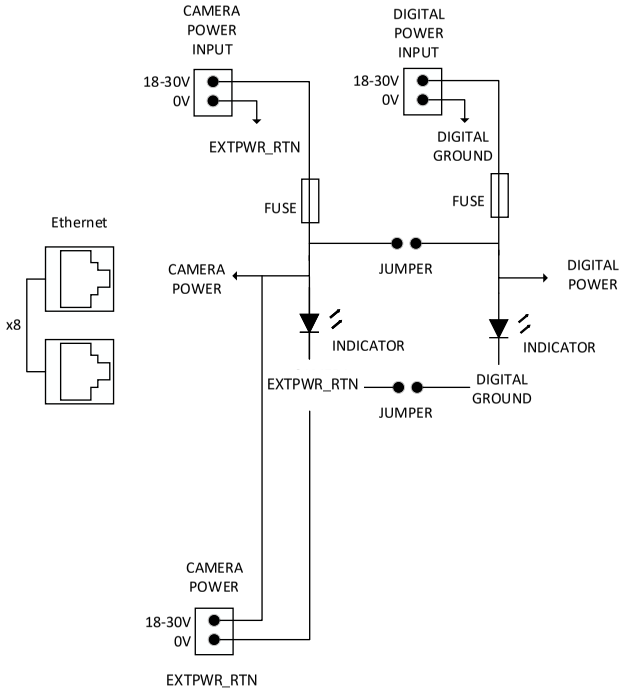

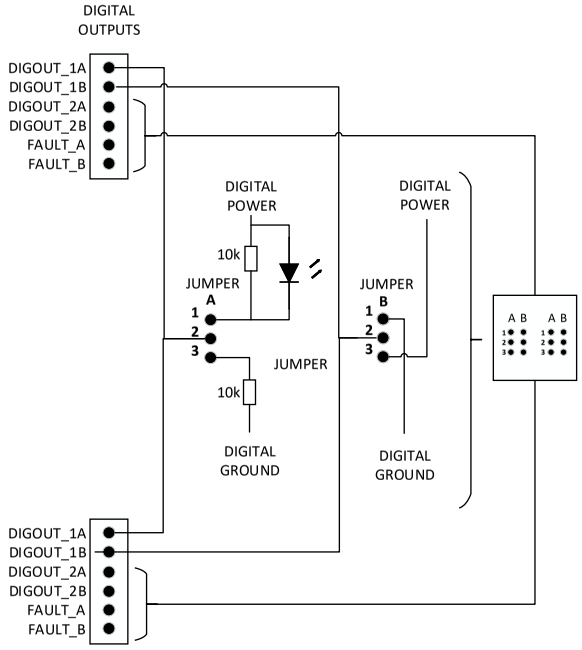

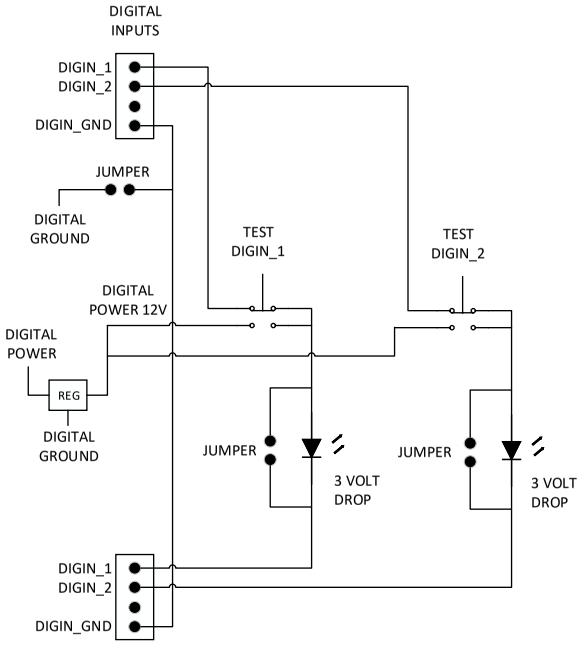

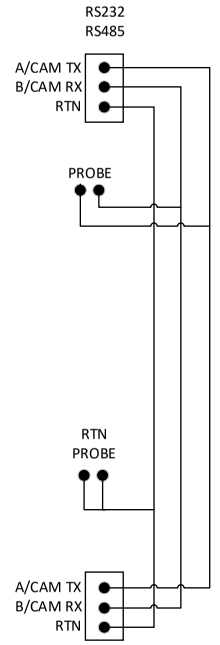

Camera side



12.1 Connection examples

(See next page)

TEST DIGITAL IN

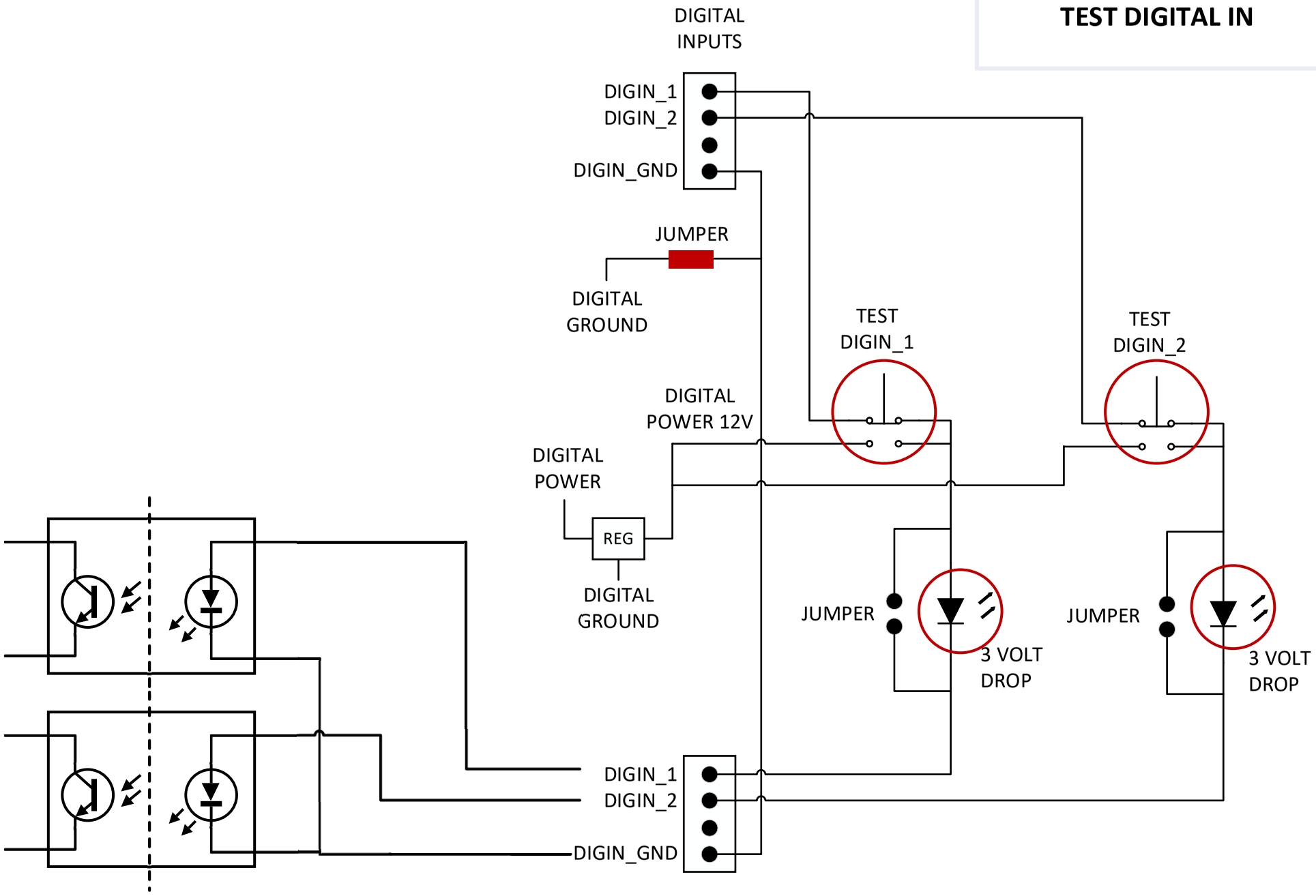

TEST DIGITAL OUT
Using LED on an
A-series connection board

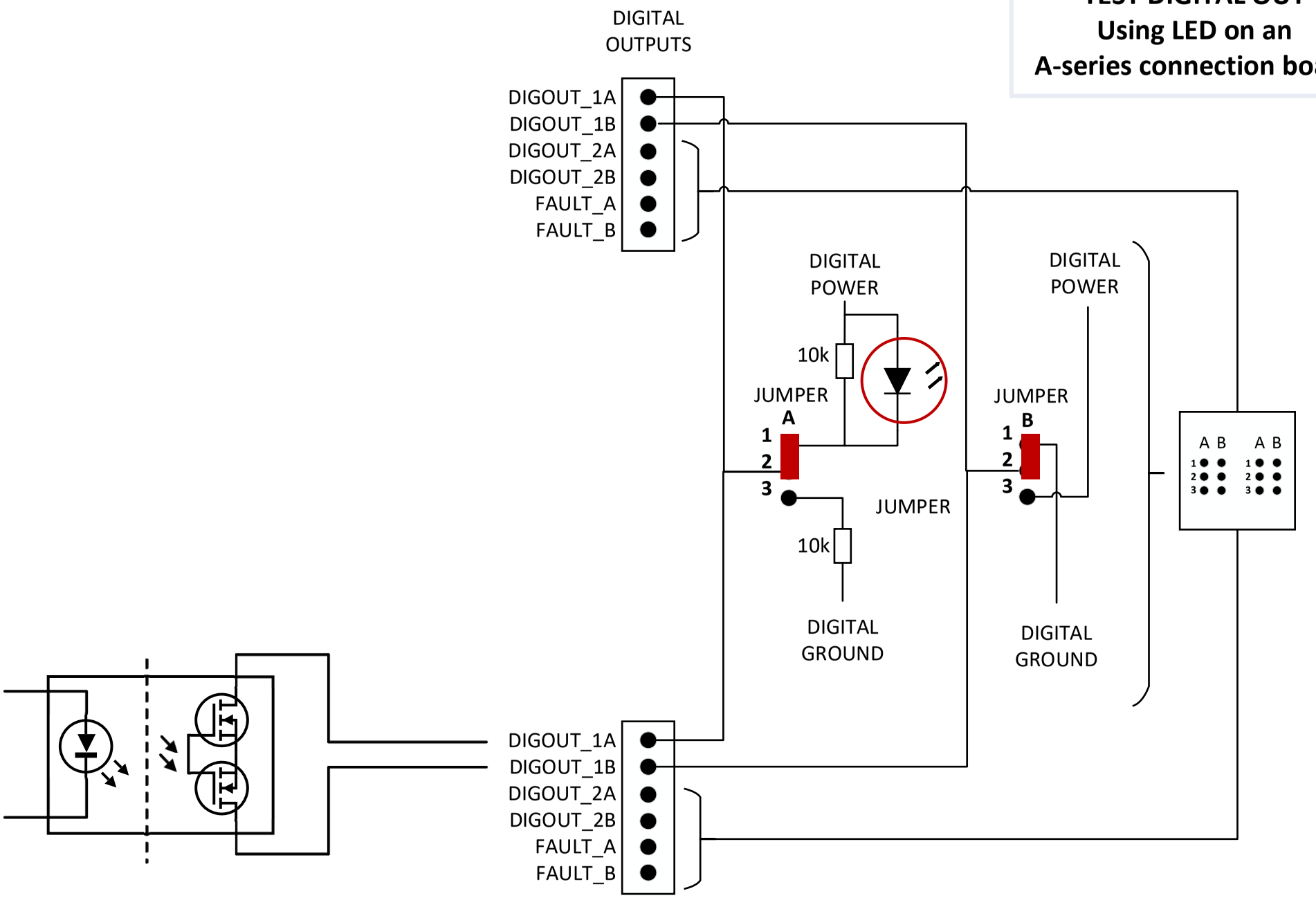

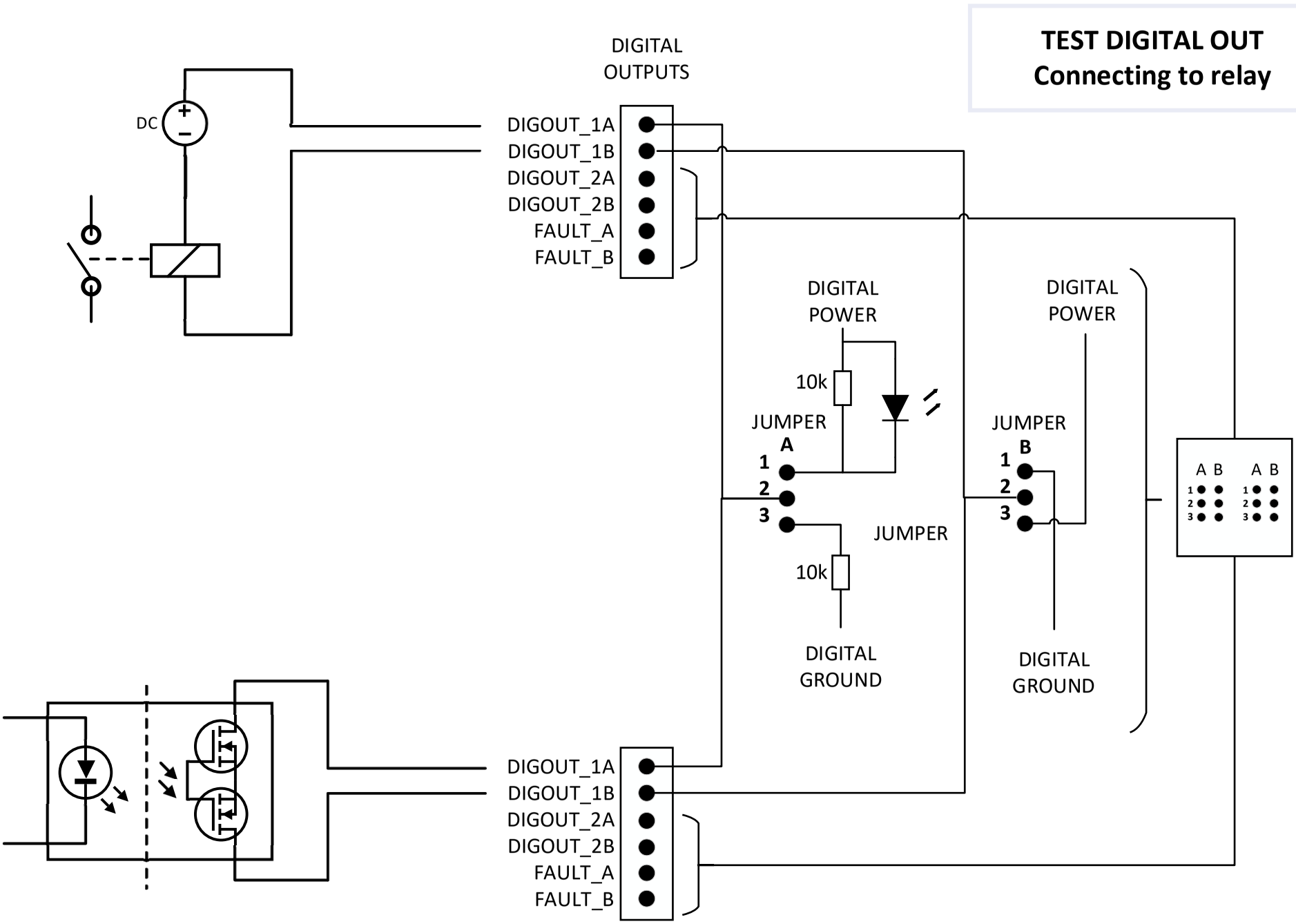
TEST DIGITAL OUT
Connecting to relay
DIGITAL
OUTPUTS
DC
DIGOUT_1A
DIGOUT_1B
DIGOUT_2A
DIGOUT_2B
FAULT_A
FAULT_B
DIGITAL
POWER
10k
JUMPER
A
1
2
3
JUMPER
10k
DIGITAL
GROUND
DIGITAL
POWER
JUMPER
B
1
2
3
DIGITAL
GROUND
A B
A B
DIGOUT_1A
DIGOUT_1B
DIGOUT_2A
DIGOUT_2B
FAULT_A
FAULT_B

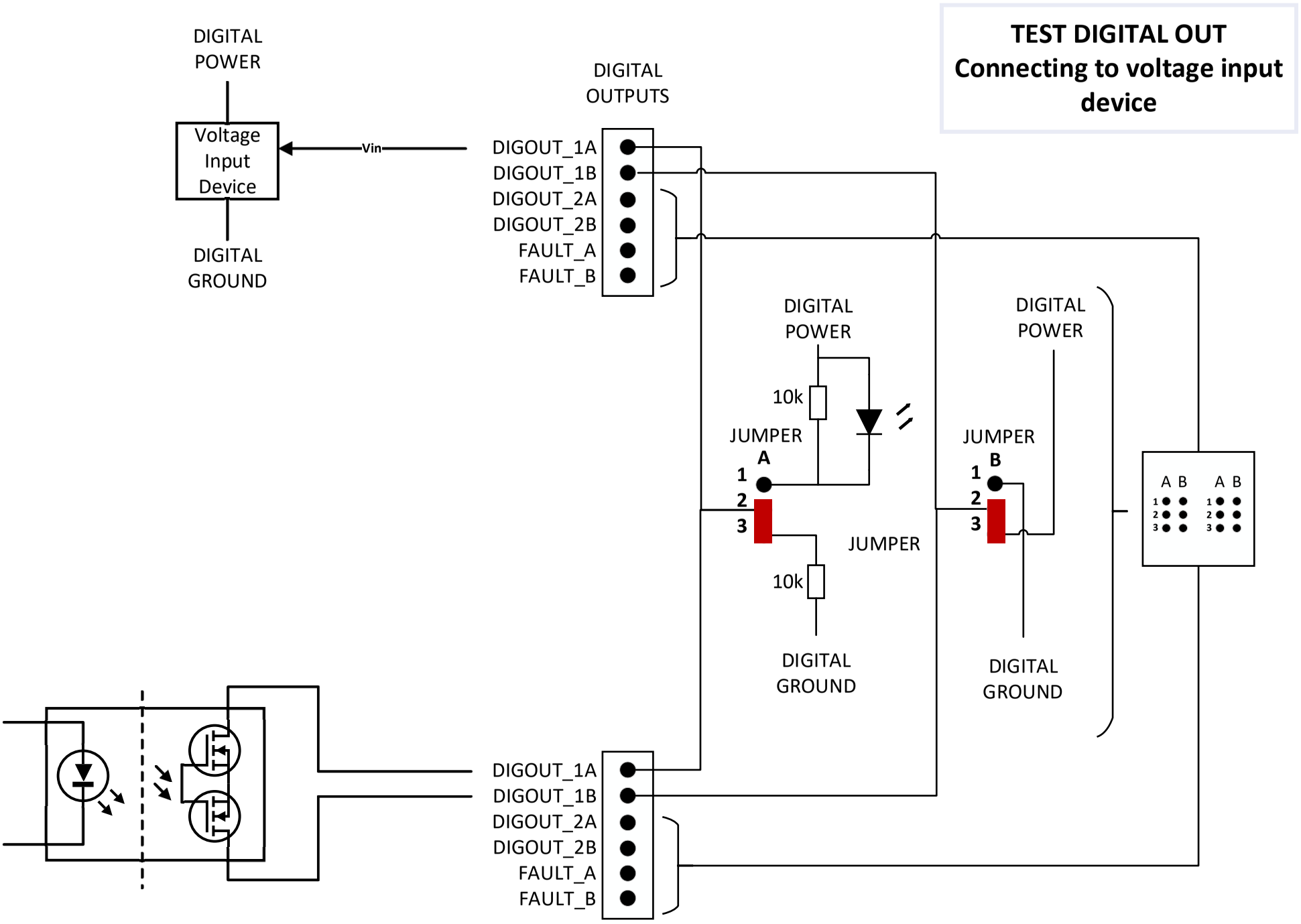
TEST DIGITAL OUT
Connecting to voltage input device
DIGITAL POWER
Voltage Input Device
Vin
DIGITAL GROUND
DIGITAL OUTPUTS
DIGOUT_1A
DIGOUT_1B
DIGOUT_2A
DIGOUT_2B
FAULT_A
FAULT_B
DIGITAL POWER
10k
JUMPER A
1
2
3
JUMPER
10k
DIGITAL GROUND
DIGITAL POWER
JUMPER B
1
2
3
DIGITAL GROUND
A B
A B
DIGOUT_1A
DIGOUT_1B
DIGOUT_2A
DIGOUT_2B
FAULT_A
FAULT_B

TEST
External Camera power to Digital power

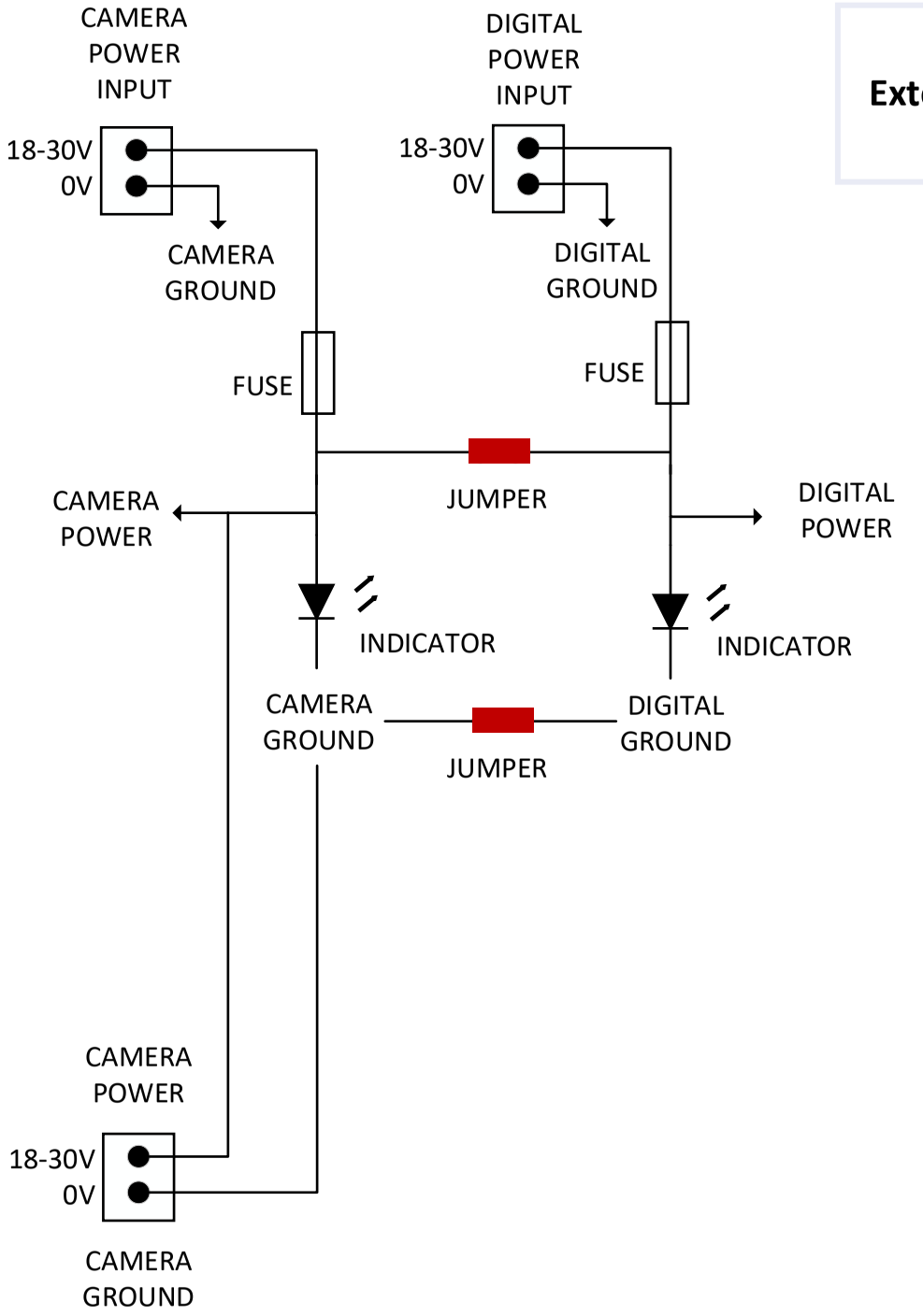

13 Software supported byFLIR A40/A50/A70 series cameras

For a list of supported software, see the online documentation for the FLIR A40/A50/A70 camera series: http://support.flir.com/resources/9s26/.

14 Mechanical drawings

(See next page)

Generic dimensions for all FOV

Back View

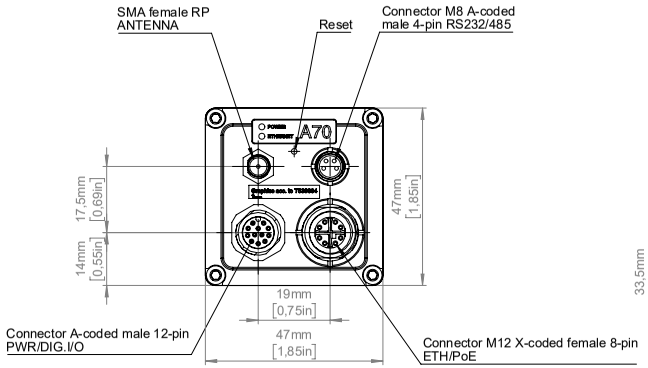

Front View

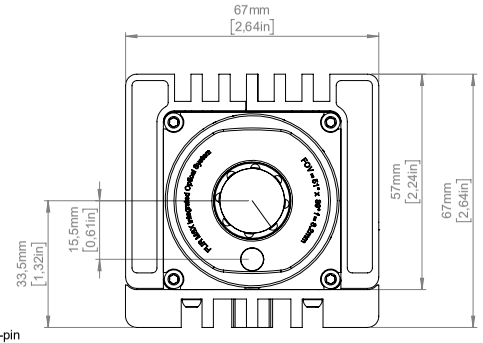

Bottom View

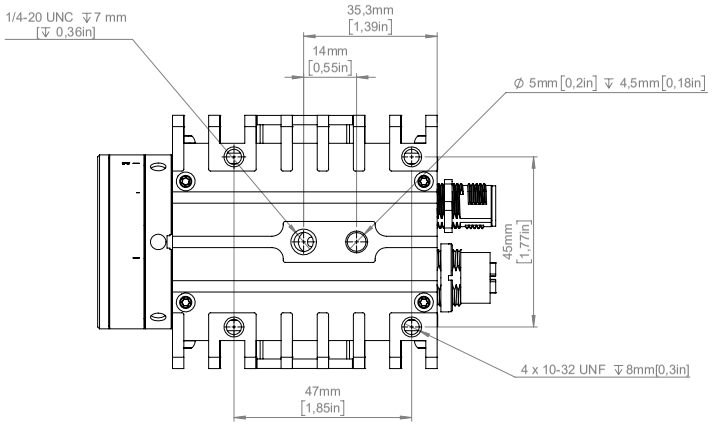

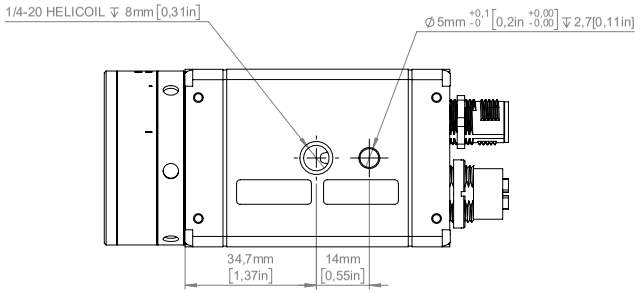

IR Lens 29 deg

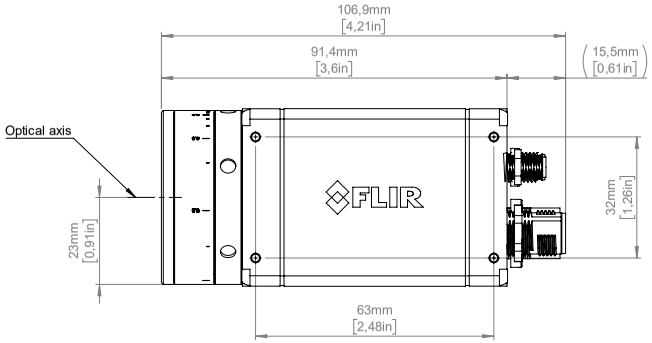

IR Lens 51 deg

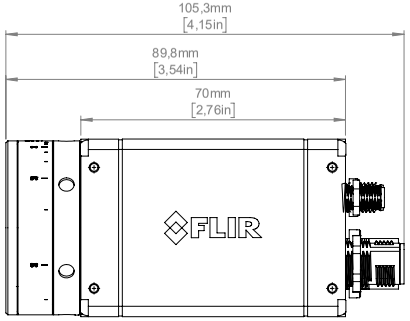

IR Lens 95 deg

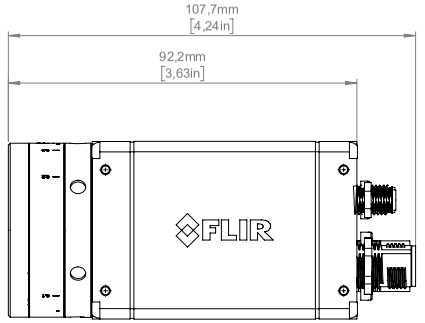

Modified	Check	Drawn by
2021-04-15	JOHE	R&D

Denomination

Basic dimension Ax0

Size	Sheet
A2	1(1)
Scale	
1:1	
Drawing No.	Rev
T131228	A

© 2016, FLIR Systems, Inc. All rights reserved worldwide. No part of this drawing may be reproduced, stored in a retrieval system, or transmitted in any form, or by any means, electronic, mechanical, photocopying, recording, or otherwise, without written permission from FLIR Systems, Inc. Specifications subject to change without further notice. Dimensional data is based on nominal values. Products may be subject to regional market considerations. License procedures may apply. Product may be subject to US Export Regulations. Please refer to exportquestions@flir.com with any questions. Diversion contrary to US law is prohibited.

15 EU Declaration of conformity

[See next page]

Täby, Sweden July 07, 2021 **AQ320438**

CE Declaration of Conformity – EU Declaration of Conformity

Product: FLIR AXX series including A50 and A70

Name and address of the manufacturer: FLIR Systems AB
PO Box 7376
SE-187 15 Täby, Sweden

This declaration of conformity is issued under the sole responsibility of the manufacturer.

The object of the declaration: FLIR AXX series (Product Model Name FLIR-A8990).

The object of the declaration described above is in conformity with the relevant Union harmonisation legislation:

Directives

Directive	2011/65/EU	RoHS and 2015/830/EU (Phtalates)
Directive	2014/53/EU	Radio Equipment Directive (RED)

Standards

Emission:	EN 55032:2015	Electromagnetic Compatibility multimedia
Immunity:	EN 55035:2017	Electromagnetic Compatibility multimedia
RoHS:	EN 50581:2012	Technical documentation
Radio:	ETSI EN 300 328 v2.2.2	Wideband transmission systems
	ETSI EN 301 893 V2.1.1	5 GHz RLAN
	ETSI EN 301 489-1 V2.2.3	EMC for radio equipment compatibility
	ETSI EN 301 489-17 V3.2.4	Broadband data transmission systems
Safety:	IEC 62368-1:2014 (2nd Edition) + Cor.1: 2015 + Cor.2: 2015 and EN62368-1: 2014 + AC: 2015 + A11: 2017 + AC: 2017	Audio/video Information technology equipment

FLIR Systems AB
Quality Assurance



Lea Dabiri
Quality Manager

16 Indicator LEDs and factory reset button

For location of the indicator LEDs and the factory reset button, see Figure 6.1 *View from the rear*, page 12.

16.1 Power/error indicator LED and factory reset button

Note Do not hold down the factory reset button when connecting the camera to power.

Factory default level	Factory reset button depression time period	Indicator LED status	Explanation
Level 1	> 1 second	A continuous red light	When the factory reset button is released: • Default application measurements and settings are restored.
Level 2	> 4 seconds	A flashing red light	When the factory reset button is released: • Default application measurements and settings are restored. • Network default settings are restored. **NOTE** IP adress will be set to default. Wi-Fi connection will be lost. Device will be rebooted.
Level 3	> 10 seconds	A rapidly flashing red light	When the factory reset button is released: • Default application measurements and settings are restored. • Network default settings are restored. • All changes to system configuration except installed software will be cleared. **NOTE** IP adress will be set to default. Wi-Fi connection will be lost. Device will be rebooted.

16.2 Power/error indicator LED and power modes

Indicator LED status	Explanation
Flashing green light	Normal operation.
Steady yellow light	Camera is booting up.
Steady yellow light	Camera malfunction.

16.3 Wired Ethernet connection

Note Wireless network activity is not reflected by the indicator LEDs.

Indicator LED status	Explanation
A flashing green light	The camera is connected to a network and the network activity is indicated.
No light (i.e., it is switched off).	The camera is not connected to any network.

17 Cleaning the camera

17.1 Camera housing, cables, and other items

Use one of these liquids:

- Warm water
- A weak detergent solution

Equipment:

- A soft cloth

Follow this procedure:

1. Soak the cloth in the liquid.
2. Twist the cloth to remove excess liquid.
3. Clean the part with the cloth.

CAUTION

Do not apply solvents or similar liquids to the camera, the cables, or other items. This can cause damage.

17.2 Infrared lens

Use one of these liquids:

- A commercial lens cleaning liquid with more than 30% isopropyl alcohol.
- 96% ethyl alcohol (C_2H_5OH).

Equipment:

- Cotton wool

CAUTION

If you use a lens cleaning cloth it must be dry. Do not use a lens cleaning cloth with the liquids that are listed above. These liquids can cause material on the lens cleaning cloth to become loose. This material can have an unwanted effect on the surface of the lens.

Follow this procedure:

1. Soak the cotton wool in the liquid.
2. Twist the cotton wool to remove excess liquid.
3. Clean the lens one time only and discard the cotton wool.

WARNING

Make sure that you read all applicable MSDS (Material Safety Data Sheets) and warning labels on containers before you use a liquid: the liquids can be dangerous.

CAUTION

- Be careful when you clean the infrared lens. The lens has a delicate anti-reflective coating.
- Do not clean the infrared lens too vigorously. This can damage the anti-reflective coating.

18 About calibration

18.1 Introduction

Calibration of a thermal camera is a prerequisite for temperature measurement. The calibration provides the relationship between the input signal and the physical quantity that the user wants to measure. However, despite its widespread and frequent use, the term “calibration” is often misunderstood and misused. Local and national differences as well as translation-related issues create additional confusion.

Unclear terminology can lead to difficulties in communication and erroneous translations, and subsequently to incorrect measurements due to misunderstandings and, in the worst case, even to lawsuits.

18.2 Definition—what is calibration?

The International Bureau of Weights and Measures[2] defines *calibration*[3] in the following way:

an operation that, under specified conditions, in a first step, establishes a relation between the quantity values with measurement uncertainties provided by measurement standards and corresponding indications with associated measurement uncertainties and, in a second step, uses this information to establish a relation for obtaining a measurement result from an indication.

The calibration itself may be expressed in different formats: this can be a statement, calibration function, calibration diagram[4], calibration curve[5], or calibration table.

Often, the first step alone in the above definition is perceived and referred to as being “calibration.” However, this is not (always) sufficient.

Considering the calibration procedure of a thermal camera, the first step establishes the relation between emitted radiation (the quantity value) and the electrical output signal (the indication). This first step of the calibration procedure consists of obtaining a homogeneous (or uniform) response when the camera is placed in front of an extended source of radiation.

As we know the temperature of the reference source emitting the radiation, in the second step the obtained output signal (the indication) can be related to the reference source’s temperature (measurement result). The second step includes drift measurement and compensation.

To be correct, calibration of a thermal camera is, strictly, not expressed through temperature. Thermal cameras are sensitive to infrared radiation: therefore, at first you obtain a radiance correspondence, then a relationship between radiance and temperature. For bolometer cameras used by non-R&D customers, radiance is not expressed: only the temperature is provided.

18.3 Camera calibration at FLIR Systems

Without calibration, an infrared camera would not be able to measure either radiance or temperature. At FLIR Systems, the calibration of uncooled microbolometer cameras with a measurement capability is carried out during both production and service. Cooled cameras with photon detectors are often calibrated by the user with special software. With this type of software, in theory, common handheld uncooled thermal cameras could be calibrated by the user too. However, as this software is not suitable for reporting purposes, most users do not have it. Non-measuring devices that are used for imaging only

2. http://www.bipm.org/en/about-us/ [Retrieved 2017-01-31.]
3. http://jcgm.bipm.org/vim/en/2.39.html [Retrieved 2017-01-31.]
4. http://jcgm.bipm.org/vim/en/4.30.html [Retrieved 2017-01-31.]
5. http://jcgm.bipm.org/vim/en/4.31.html [Retrieved 2017-01-31.]

do not need temperature calibration. Sometimes this is also reflected in camera terminology when talking about infrared or thermal imaging cameras compared with thermography cameras, where the latter are the measuring devices.

The calibration information, no matter if the calibration is done by FLIR Systems or the user, is stored in calibration curves, which are expressed by mathematical functions. As radiation intensity changes with both temperature and the distance between the object and the camera, different curves are generated for different temperature ranges and exchangeable lenses.

18.4 The differences between a calibration performed by a user and that performed directly at FLIR Systems

First, the reference sources that FLIR Systems uses are themselves calibrated and traceable. This means, at each FLIR Systems site performing calibration, that the sources are controlled by an independent national authority. The camera calibration certificate is confirmation of this. It is proof that not only has the calibration been performed by FLIR Systems but that it has also been carried out using calibrated references. Some users own or have access to accredited reference sources, but they are very few in number.

Second, there is a technical difference. When performing a user calibration, the result is often (but not always) not drift compensated. This means that the values do not take into account a possible change in the camera's output when the camera's internal temperature varies. This yields a larger uncertainty. Drift compensation uses data obtained in climate-controlled chambers. All FLIR Systems cameras are drift compensated when they are first delivered to the customer and when they are recalibrated by FLIR Systems service departments.

18.5 Calibration, verification and adjustment

A common misconception is to confuse *calibration* with *verification* or *adjustment*. Indeed, calibration is a prerequisite for *verification*, which provides confirmation that specified requirements are met. Verification provides objective evidence that a given item fulfills specified requirements. To obtain the verification, defined temperatures (emitted radiation) of calibrated and traceable reference sources are measured. The measurement results, including the deviation, are noted in a table. The verification certificate states that these measurement results meet specified requirements. Sometimes, companies or organizations offer and market this verification certificate as a "calibration certificate."

Proper verification—and by extension calibration and/or recalibration—can only be achieved when a validated protocol is respected. The process is more than placing the camera in front of blackbodies and checking if the camera output (as temperature, for instance) corresponds to the original calibration table. It is often forgotten that a camera is not sensitive to temperature but to radiation. Furthermore, a camera is an *imaging* system, not just a single sensor. Consequently, if the optical configuration allowing the camera to "collect" radiance is poor or misaligned, then the "verification" (or calibration or recalibration) is worthless.

For instance, one has to ensure that the distance between the blackbody and the camera as well as the diameter of the blackbody cavity are chosen so as to reduce stray radiation and the size-of-source effect.

To summarize: a validated protocol must comply with the physical laws for *radiance*, and not only those for temperature.

Calibration is also a prerequisite for *adjustment*, which is the set of operations carried out on a measuring system such that the system provides prescribed indications corresponding to given values of quantities to be measured, typically obtained from

measurement standards. Simplified, adjustment is a manipulation that results in instruments that measure correctly within their specifications. In everyday language, the term “calibration” is widely used instead of “adjustment” for measuring devices.

18.6 Non-uniformity correction

When the thermal camera displays ”Calibrating...” it is adjusting for the deviation in response of each individual detector element (pixel). In thermography, this is called a ”non-uniformity correction” (NUC). It is an offset update, and the gain remains unchanged.

The European standard EN 16714-3, Non-destructive Testing—Thermographic Testing —Part 3: Terms and Definitions, defines an NUC as “Image correction carried out by the camera software to compensate for different sensitivities of detector elements and other optical and geometrical disturbances.”

During the NUC (the offset update), a shutter (internal flag) is placed in the optical path, and all the detector elements are exposed to the same amount of radiation originating from the shutter. Therefore, in an ideal situation, they should all give the same output signal. However, each individual element has its own response, so the output is not uniform. This deviation from the ideal result is calculated and used to mathematically perform an image correction, which is essentially a correction of the displayed radiation signal. Some cameras do not have an internal flag. In this case, the offset update must be performed manually using special software and an external uniform source of radiation.

An NUC is performed, for example, at start-up, when changing a measurement range, or when the environment temperature changes. Some cameras also allow the user to trigger it manually. This is useful when you have to perform a critical measurement with as little image disturbance as possible.

18.7 Thermal image adjustment (thermal tuning)

Some people use the term “image calibration” when adjusting the thermal contrast and brightness in the image to enhance specific details. During this operation, the temperature interval is set in such a way that all available colors are used to show only (or mainly) the temperatures in the region of interest. The correct term for this manipulation is “thermal image adjustment” or “thermal tuning”, or, in some languages, “thermal image optimization.” You must be in manual mode to undertake this, otherwise the camera will set the lower and upper limits of the displayed temperature interval automatically to the coldest and hottest temperatures in the scene.

19 About FLIR Systems

FLIR Systems was established in 1978 to pioneer the development of high-performance infrared imaging systems, and is the world leader in the design, manufacture, and marketing of thermal imaging systems for a wide variety of commercial, industrial, and government applications. Today, FLIR Systems embraces five major companies with outstanding achievements in infrared technology since 1958—the Swedish AGEMA Infrared Systems (formerly AGA Infrared Systems), the three United States companies Indigo Systems, FSI, and Inframetrics, and the French company Cedip.

Since 2007, FLIR Systems has acquired several companies with world-leading expertise:

- NEOS (2019)
- Endeavor Robotics (2019)
- Aeryon Labs (2019)
- Seapilot (2018)
- Acyclica (2018)
- Prox Dynamics (2016)
- Point Grey Research (2016)
- DVTEL (2015)
- DigitalOptics micro-optics business (2013)
- MARSS (2013)
- Traficon (2012)
- Aerius Photonics (2011)
- TackTick Marine Digital Instruments (2011)
- ICx Technologies (2010)
- Raymarine (2010)
- Directed Perception (2009)
- OmniTech Partners (2009)
- Salvador Imaging (2009)
- Ifara Tecnologías (2008)
- Extech Instruments (2007)

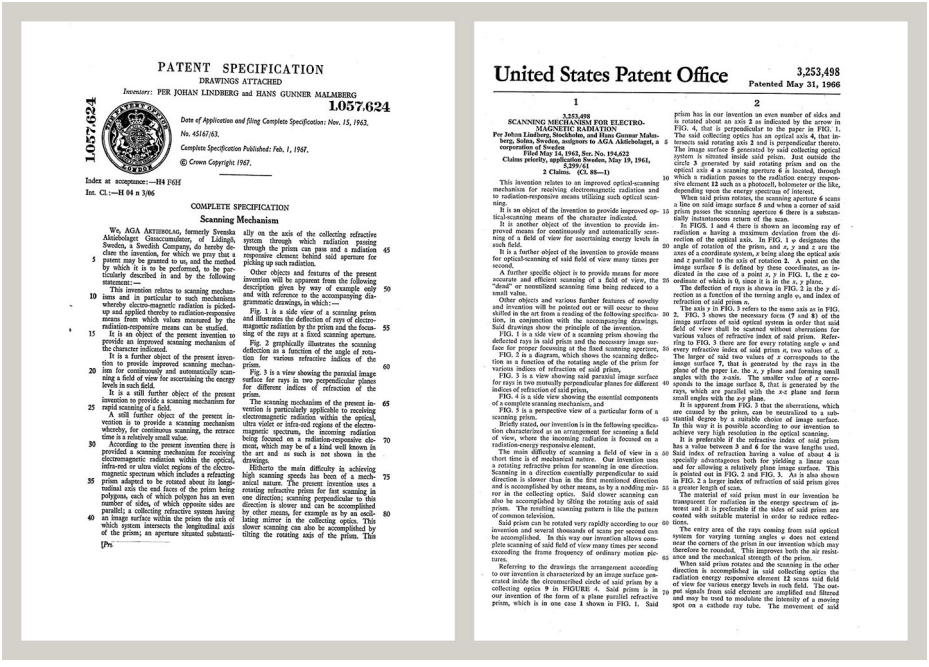

PATENT SPECIFICATION

DRAWINGS ATTACHED

Inventors: PER JOHAN LINDBERG and HANS GUNNER MALMBERG

1.057.624

Date of Application and filing Complete Specification: Nov. 15, 1963.

No. 45167/63.

Complete Specification Published: Feb. 1, 1967.

© Crown Copyright 1967.

Index at acceptance:—H4 F6H

Int. Cl.:—H 04 n 3/06

COMPLETE SPECIFICATION

Scanning Mechanism

We, AGA ARTIEBOLAG, formerly Svenska Aktiebolaget Gasaccumulator, of Lidingö, Sweden, a Swedish Company, do hereby declare the invention, for which we pray that a patent may be granted to us, and the method by which it is to be performed, to be particularly described in and by the following statement:—

This invention relates to scanning mechanisms and in particular to such mechanisms whereby electro-magnetic radiation is picked-up and applied thereby to radiation-responsive means from which values measured by the radiation-responsive means can be studied.

It is an object of the present invention to provide an improved scanning mechanism of the character indicated.

It is a further object of the present invention to provide improved scanning mechanism for continuously and automatically scanning a field of view for ascertaining the energy levels in such field.

It is a still further object of the present invention to provide a scanning mechanism for rapid scanning of a field.

A still further object of the present invention is to provide a scanning mechanism whereby, for continuous scanning, the retrace time is a relatively small value.

According to the present invention there is provided a scanning mechanism for receiving electromagnetic radiation within the optical, infra-red or ultra violet regions of the electromagnetic spectrum which includes a refracting prism adapted to be rotated about its longitudinal axis the end faces of the prism being polygons, each of which polygon has an even number of sides, of which opposite sides are parallel; a collecting refractive system having an image surface within the prism the axis of which system intersects the longitudinal axis of the prism; an aperture situated substantially on the axis of the collecting refractive system through which radiation passing through the prism can pass and a radiation responsive element behind said aperture for picking up such radiation.

Other objects and features of the present invention will be apparent from the following description given by way of example only and with reference to the accompanying diagrammatic drawings, in which:—

Fig. 1 is a side view of a scanning prism and illustrates the deflection of rays of electromagnetic radiation by the prism and the focusing of the rays at a fixed scanning aperture.

Fig. 2 graphically illustrates the scanning deflection as a function of the angle of rotation for various refractive indices of the prism.

Fig. 3 is a view showing the parasial image surface for rays in two perpendicular planes for different indices of refraction of the prism.

The scanning mechanism of the present invention is particularly applicable to receiving electromagnetic radiation within the optical, ultra violet or infra-red regions of the electromagnetic spectrum, the incoming radiation being focused on a radiation-responsive element, which may be of a kind well known in the art and as such is not shown in the drawings.

Hitherto the main difficulty in achieving high scanning speeds has been of a mechanical nature. The present invention uses a rotating refractive prism for fast scanning in one direction; scanning perpendicular to this direction is slower and can be accomplished by other means, for example as by an oscillating mirror in the collecting optics. This slower scanning can also be accomplished by tilting the rotating axis of the prism. This

[Pri-

United States Patent Office 3,253,498 Patented May 31, 1966

1 2

3,253,498

SCANNING MECHANISM FOR ELECTROMAGNETIC RADIATION

Per Johan Lindberg, Stockholm, and Hans Gunnar Malmberg, Solna, Sweden, assignors to AGA Aktiebolaget, a corporation of Sweden

Filed May 14, 1962, Ser. No. 194,622

Claims priority, application Sweden, May 19, 1961, 5,299/61

2 Claims. (Cl. 88—1)

This invention relates to an improved optical-scanning mechanism for receiving electromagnetic radiation and to radiation-responsive means utilizing such optical scanning.

It is an object of the invention to provide improved optical-scanning means of the character indicated.

It is another object of the invention to provide improved means for continuously and automatically scanning of a field of view for ascertaining energy levels in such field.

It is a further object of the invention to provide means for optical-scanning of said field of view many times per second.

A further specific object is to provide means for more accurate and efficient scanning of a field of view, the "dead" or nonutilized scanning time being reduced to a small value.

Other objects and various further features of novelty and invention will be pointed out or will occur to those skilled in the art from a reading of the following specification, in conjunction with the accompanying drawings. Said drawings show the principle of the invention.

FIG. 1 is a side view of a scanning prism showing the deflected rays in said prism and the necessary image surface for proper focussing at the fixed scanning aperture.

FIG. 2 is a diagram, which shows the scanning deflection as a function of the rotating angle of the prism for various indices of refraction of said prism,

FIG. 3 is a view showing said parasial image surface for rays in two mutually perpendicular planes for different indices of refraction of said prism,

FIG. 4 is a side view showing the essential components of a complete scanning mechanism, and

FIG. 5 is a perspective view of a particular form of a scanning prism.

Briefly stated, our invention is in the following specification characterized as an arrangement for scanning a field of view, where the incoming radiation is focused on a radiation-energy responsive element.

The main difficulty of scanning a field of view in a short time is of mechanical nature. Our invention uses a rotating refractive prism for scanning in one direction. Scanning in a direction essentially perpendicular to said direction is slower than in the first mentioned direction and is accomplished by other means, as by a nodding mirror in the collecting optics. Said slower scanning can also be accomplished by tilting the rotating axis of said prism. The resulting scanning pattern is like the pattern of common television.

Said prism can be rotated very rapidly according to our invention and several thousands of scans per second can be accomplished. In this way our invention allows complete scanning of said field of view many times per second exceeding the frame frequency of ordinary motion pictures.

Referring to the drawings the arrangement according to our invention is characterized by an image surface generated inside the circumscribed circle of said prism by a collecting optics 9 in FIGURE 4. Said prism is in our invention of the form of a plane parallel refractive prism, which is in one case 1 shown in FIG. 1. Said prism has in our invention an even number of sides and is rotated about an axis 2 as indicated by the arrow in FIG. 4, that is perpendicular to the paper in FIG. 1. The said collecting optics has an optical axis 4, that intersects said rotating axis 2 at right perpendicular thereto. The image surface 5 generated by said collecting optical system is situated inside said circle first outside the circle 3 generated by said rotating prism 1 on the optical axis 4 a scanning aperture 6 is located, through which a radiation passes to the radiation energy responsive element 12 such as a photocell, bolometer or the like, depending upon the energy spectrum of interest.

When said prism rotates, the scanning aperture 6 scans a line on said image surface 5 and when a corner of said prism passes the scanning aperture 6 there is a substantially instantaneous return of the scan.

In FIGS. 1 and 4 there is shown an incoming ray of radiation n having a maximum deviation from the direction of the optical axis. In FIG. 1 φ designates the angle of rotation of the prism, and x, y and z are the axes of a coordinate system, x being along the optical axis and z parallel to the axis of rotation 2. A point on the image surface 5 is defined by three coordinates, as indicated in the case of a point x, y in FIG. 1, the z coordinate of which is 0, since it is in the x, y plane.

The deflection of rays is shown in FIG. 2 in the y direction as a function of the inwing angle ψ, and index of refraction of said prism n.

The axis y in FIG. 3 refers to the same axis as in FIG. 2. FIG. 3 shows the necessary form (7 and 8) of the image surfaces of said optical system in order that said field of view shall be scanned without aberrations for various values of refractive index of said prism. Referring to FIG. 3 there are for every rotating angle ψ and every refractive index of said prism n, two values of x. The larger of said two values of x corresponds to the image surface 7, that is generated by the rays in the plane of the paper i.e. the x, y plane and forming small angles with the x-axis. The smaller value of x corresponds to the image surface 8, that is generated by the rays, which are parallel with the x-z plane and form small angles with the x-y plane.

It is apparent from FIG. 3 that the aberrations, which are caused by the prism, can be neutralized to a substantial degree by a suitable choice of image surface. In this way it is possible according to our invention to achieve very high resolution in the optical scanning.

It is preferable if the refractive index of said prism has a value between 3 and 6 for the wave lengths used. Said index of refraction having a value of about 4 is specially advantageous both for yielding a linear scan and for allowing a relatively plane image surface. This is pointed out in FIG. 2 and FIG. 3. As is also shown in FIG. 2 a larger index of refraction of said prism gives a greater length of scan.

The material of said prism must in our invention be transparent for radiation in the energy spectrum of interest and it is preferable if the sides of said prism are coated with suitable material in order to reduce reflections.

The entry area of the rays coming from said optical system for varying turning angles ψ does not extend near the corners of the prism in our invention which may therefore be rounded. This improves both the air resistance and the mechanical strength of the prism.

When said prism rotates and the scanning in the other direction is accomplished in said collecting optics the radiation energy responsive element 12 scans said field of view for various energy levels in such field. The output signals from said element are amplified and filtered and may be used to modulate the intensity of a moving spot on a cathode ray tube. The movement of said

Figure 19.1 Patent documents from the early 1960s

FLIR Systems has three manufacturing plants in the United States (Portland, OR, Boston, MA, Santa Barbara, CA) and one in Sweden (Stockholm). Since 2007 there is also a manufacturing plant in Tallinn, Estonia. Direct sales offices in Belgium, Brazil, China, France, Germany, Great Britain, Hong Kong, Italy, Japan, Korea, Sweden, and the USA—together

with a worldwide network of agents and distributors—support our international customer base.

FLIR Systems is at the forefront of innovation in the infrared camera industry. We anticipate market demand by constantly improving our existing cameras and developing new ones. The company has set milestones in product design and development such as the introduction of the first battery-operated portable camera for industrial inspections, and the first uncooled infrared camera, to mention just two innovations.



1969: Thermovision Model 661. The camera weighed approximately 25 kg (55 lb.), the oscilloscope 20 kg (44 lb.), and the tripod 15 kg (33 lb.). The operator also needed a 220 VAC generator set, and a 10 L (2.6 US gallon) jar with liquid nitrogen. To the left of the oscilloscope the Polaroid attachment (6 kg (13 lb.)) can be seen.



2015: FLIR One, an accessory to iPhone and Android mobile phones. Weight: 36 g (1.3 oz.).

FLIR Systems manufactures all vital mechanical and electronic components of the camera systems itself. From detector design and manufacturing, to lenses and system electronics, to final testing and calibration, all production steps are carried out and supervised by our own engineers. The in-depth expertise of these infrared specialists ensures the accuracy and reliability of all vital components that are assembled into your infrared camera.

19.1 More than just an infrared camera

At FLIR Systems we recognize that our job is to go beyond just producing the best infrared camera systems. We are committed to enabling all users of our infrared camera systems to work more productively by providing them with the most powerful camera–software combination. Especially tailored software for predictive maintenance, R & D, and process monitoring is developed in-house. Most software is available in a wide variety of languages.

We support all our infrared cameras with a wide variety of accessories to adapt your equipment to the most demanding infrared applications.

19.2 Sharing our knowledge

Although our cameras are designed to be very user-friendly, there is a lot more to thermography than just knowing how to handle a camera. Therefore, FLIR Systems has founded the Infrared Training Center (ITC), a separate business unit, that provides certified training courses. Attending one of the ITC courses will give you a truly hands-on learning experience.

The staff of the ITC are also there to provide you with any application support you may need in putting infrared theory into practice.

19.3 Supporting our customers

FLIR Systems operates a worldwide service network to keep your camera running at all times. If you discover a problem with your camera, local service centers have all the equipment and expertise to solve it within the shortest possible time. Therefore, there is no need to send your camera to the other side of the world or to talk to someone who does not speak your language.

Website
www.flir.com

Customer support
support.flir.com

Copyright
© 2026, Teledyne FLIR LLC. All rights reserved.

Export Control
Products described herein may be subject to export regulations. This document does not contain export-controlled information.

Publ. No.: T810579
Release: AI
Commit: 114713
Head: 114713
Language: en-US
Modified: 2026-10-01
Formatted: 2026-10-01